ApexPro™ Receiver System

Service Manual

Software Version 2

2001989-100 Revision A

GE Medical Systems
Information Technologies

gemedical.com

NOTE: Due to continuing product innovation, specifications in this manual are subject to change without notice.

Listed below are GE Medical Systems *Information Technologies* trademarks. All other trademarks contained herein are the property of their respective owners.

900 SC, ACCUSKETCH, AccuVision, APEX, AQUA-KNOT, ARCHIVIST, Autoseq, BABY MAC, C Qwik Connect, CardioServ, CardioSmart, CardioSys, CardioWindow, CASE, CD TELEMETRY, CENTRA, CHART GUARD, CINE 35, CORO, COROLAN, COROMETRICS, Corometrics Sensor Tip, CRG PLUS, DASH, Digistore, Digital DATAQ, E for M, EAGLE, Event-Link, FMS 101B, FMS 111, HELLIGE, IMAGE STORE, INTELLIMOTION, IQA, LASER SXP, MAC, MAC-LAB, MACTRODE, MANAGED USE, MARQUETTE, MARQUETTE MAC, MARQUETTE MEDICAL SYSTEMS, MARQUETTE UNITY NETWORK, MARS, MAX, MEDITEL, MEI, MEI in the circle logo, MEMOPORT, MEMOPORT C, MINISTORE, MINNOWS, Monarch 8000, MULTI-LINK, MULTISCRIPTOR, MUSE, MUSE CV, Neo-Trak, NEUROSCRIPT, OnlineABG, OXYMONITOR, Pres-R-Cuff, PRESSURE-SCRIBE, QMI, QS, Quantitative Medicine, Quantitative Sentinel, RAC RAMS, RSVP, SAM, SEER, SILVERTRACE, SOLAR, SOLARVIEW, Spectra 400, Spectra-Overview, Spectra-Tel, ST GUARD, TRAM, TRAM-NET, TRAM-RAC, TRAMSCOPE, TRIM KNOB, Trimline, UNION STATION, UNITY logo, UNITY NETWORK, Vari-X, Vari-X Cardiomatic, VariCath, VARIDEX, VAS, and Vision Care Filter are trademarks of GE Medical Systems *Information Technologies* registered in the United States Patent and Trademark Office.

12SL, 15SL, Access, AccuSpeak, ADVANTAGE, BAM, BODYTRODE, Cardiomatic, CardioSpeak, CD TELEMETRY®-LAN, CENTRALSCOPE, Corolation, EDIC, EK-Pro, Event-Link Cirrus, Event-Link Cumulus, Event-Link Nimbus, HI-RES, ICMMS, IMAGE VAULT, IMPACT.wf, INTER-LEAD, IQA, LIFEWATCH, Managed Use, MARQUETTE PRISM, MARQUETTE® RESPONDER, MENTOR, MicroSmart, MMS, MRT, MUSE CardioWindow, NST PRO, NAUTILUS, O_2SENSOR, Octanet, OMRS, PHi-Res, Premium, Prism, QUIK CONNECT V, QUICK CONNECT, QT Guard, SMART-PAC, SMARTLOOK, Spiral Lok, Sweetheart, UNITY, Universal, Waterfall, and Walkmom are trademarks of GE Medical Systems *Information Technologies*.

© GE Medical Systems *Information Technologies*, 2002. All rights reserved.

Contents

1 **Introduction 1-1**

Manual Information 1-3
Revision History 1-3
Purpose 1-3
Intended Audience 1-3

Safety Information 1-4
Responsibility of the Manufacturer 1-4
Intended Use 1-4
Warnings, Cautions, and Notes 1-5
Equipment Symbols 1-6

Service Information 1-7
Service Requirements 1-7
Equipment Identification 1-7

2 **Equipment Overview 2-1**

ApexPro Telemetry System Components 2-3
Transmitters 2-4
Antenna System 2-5
Receiver System 2-5
Host Application 2-5

Receiver System Description 2-6
Quad Receiver Modules 2-7

Technical Specifications 2-8

3 **Installation 3-1**

Mounting Options 3-3

Connections 3-4

Setup 3-5

4 **Maintenance 4-1**

Maintenance Schedule 4-3
Manufacturer Recommendations 4-3
Manufacturer Responsibility 4-3

Visual Inspection 4-4

Cleaning 4-5
Cleaning Precautions 4-5
Exterior Cleaning 4-5

Receiver System Checkout 4-6
LED Status Indicators 4-6
Ping the Receiver System 4-7
Receiver Function 4-8
Update Maintenance Record 4-11

Electrical Safety Tests 4-12
Recommendations 4-12
Power Outlet Test 4-13
Ground (Earth) Integrity 4-13
Enclosure Leakage Current Test 4-16
Test Completion 4-17

5 **Troubleshooting 5-1**

General Fault Isolation 5-3
Visual Inspection 5-3

AC Line Voltage Test 5-4
120 VAC, 50/60 Hz 5-4
240 VAC, 50/60 Hz 5-4

Troubleshooting Procedure 5-5
Check LEDs 5-5

Event Logs 5-7
Receiver System Event Logs 5-7
ApexPro Host Event Logs 5-9

6 **Parts Lists and Drawings 6-1**

Input/Output Connectors and Signals 6-3
F-Connectors, J1, J2, J3, and J4 6-3
RJ-45 Ethernet Port, J6 6-3
RS-232 Async Comm Port, J15 6-3
Input Power Plug, J16 6-4

Disassembly Guidelines 6-5
General 6-5
Replace the Fuse 6-5
Open the Unit 6-6
Remove a Quad Receiver Module 6-6
Add a Quad Receiver Module 6-7
Remove/Replace the Power Supply Assembly 6-7
Remove/Replace Receiver Subsystem PCB (Backplane) 6-8
Close and Reconnect Unit 6-9

Ordering Parts 6-10
General 6-10
Field Replaceable Units 6-10
Label Kits 2002068-0XX 6-13

7 **PCB Assemblies 7-1**

Receiver Subsystem SD801632-001C and -002B* 7-3

Quad Receiver SD801308-001C and -002C* 7-19

For your notes

1 Introduction

For your notes

Manual Information

Revision History

Each page of the document has the document part number and revision letter at the bottom of the page. The revision letter changes whenever the document is updated.

Revision	Date	Comment
A	21 March 2002	Initial release for software version 2.

Purpose

This manual provides technical information for maintaining the equipment. Use it as a guide for maintenance and electrical repair of parts considered field repairable.

Intended Audience

Users of this manual are expected to have a background in electronics, including analog and digital circuitry with RF and microprocessor architectures. It is intended for service representatives and technical personnel who maintain, troubleshoot, or repair this equipment.

Safety Information

Responsibility of the Manufacturer

GE Medical Systems *Information Technologies* is responsible for the effects of safety, reliability, and performance only if:

- assembly operations, extensions, readjustments, modifications, or repairs are carried out by persons authorized by GE Medical Systems *Information Technologies*, Inc;
- the electrical installation of the relevant room complies with the requirements of the appropriate regulations; and
- the device is used in accordance with the instructions for use.

Intended Use

This device is intended for use under the direct supervision of a licensed health care practitioner.

This device is not intended for home use.

Federal law restricts this device to be sold by or on the order of a physician.

Contact GE Medical Systems *Information Technologies* for information before connecting any devices to the equipment that are not recommended in this manual.

Parts and accessories used must meet the requirements of the applicable IEC 60601 series safety standards, and/or the system configuration must meet the requirements of the IEC 60601 medical electrical systems standard.

Periodically, and whenever the integrity of the device is in doubt, test all functions.

The use of ACCESSORY equipment not complying with the equivalent safety requirements of this equipment may lead to a reduced level of safety of the resulting system. Consideration relating to the choice shall include:

- use of the accessory in the PATIENT VICINITY; and
- evidence that the safety certification of the ACCESSORY has been performed in accordance to the appropriate IEC 60601-1 and/or IEC 60601 harmonized national standard.

If the installation of the equipment, in the USA, uses 240V rather than 120V, the source must be a center-tapped, 240V, single-phase circuit.

Warnings, Cautions, and Notes

Definitions

Warnings, cautions, and notes are used throughout this manual to designate a degree or level of hazardous situations. Hazard is defined as a source of potential injury to a person.

DANGER
Indicates an imminent hazard which, if not avoided, will result in death or serious injury.

WARNING
Indicates a potential hazard or unsafe practice which, if not avoided, could result in death or serious injury.

CAUTION
Indicates a potential hazard or unsafe practice which, if not avoided, could result in minor personal injury or product/property damage.

NOTE
Provides application tips or other useful information to assure that you get the most from your equipment.

Messages

WARNINGS
FALSE CALLS—False low heart rate indicators or false asystole calls may result with certain pacemakers because of electrical overshoot.

MONITORING PACEMAKER PATIENTS—Monitoring of pacemaker patients can only occur with the pace program activated.

PACEMAKER SPIKE—An artificial pacemaker spike is displayed in place of the actual pacemaker spike. All pacemaker spikes appear uniform. Do not diagnostically interpret pacemaker spike size and shape.

PATIENT HAZARD—A pacemaker pulse can be counted as a QRS during asystole in either pace mode. Keep pacemaker patients under close observation.

WARNINGS

RATE METERS—Keep pacemaker patients under close observation. Rate meters may continue to count the pacemaker rate during cardiac arrest and some arrhythmias. Therefore, do not rely entirely on rate meter alarms.

EXPLOSION HAZARD — Do not use this equipment in the presence of flammable anesthetics, vapors or liquids.

CAUTION

FDA POSTMARKET SAFETY ALERT—The United States FDA Center for Devices and Radiological Health issued a safety bulletin October 14, 1998. This bulletin states “that minute ventilation rate-adaptive implantable pacemakers can occasionally interact with certain cardiac monitoring and diagnostic equipment, causing the pacemakers to pace at their maximum programmed rate.”

The FDA further recommends precautions to take into consideration for patients with these types of pacemakers. These precautions include disabling the rate responsive mode and enabling an alternate pace mode. For more information contact:

Office of Surveillance and Biometrics, CDRH, FDA
1350 Piccard Drive, Mail Stop HFZ-510
Rockville, MD 20850
U.S.A.

NOTE

ECG monitoring with patients on non-invasive transcutaneous pacemakers may not be possible due to large amounts of energy produced by these devices. Monitoring ECG with an external device may be needed.

Equipment Symbols

The following symbols appear on the equipment.

ATTENTION: Consult accompanying documents before using the equipment.

Equipotential

Service Information

Service Requirements

- Refer equipment servicing to GE Medical Systems *Information Technologies* authorized service personnel only.
- Any unauthorized attempt to repair equipment under warranty voids that warranty.
- It is the user's responsibility to report the need for service to GE Medical Systems *Information Technologies* or to one of their authorized agents.
- Failure on the part of the responsible individual, hospital, or institution using this equipment to implement a satisfactory maintenance schedule may cause undue equipment failure and possible health hazards.
- Regular maintenance, irrespective of usage, is essential to ensure that the equipment will always be functional when required.

Equipment Identification

Every GE Medical Systems *Information Technologies* device has a unique serial number for identification. The serial number appears on the product label on the base of each unit.

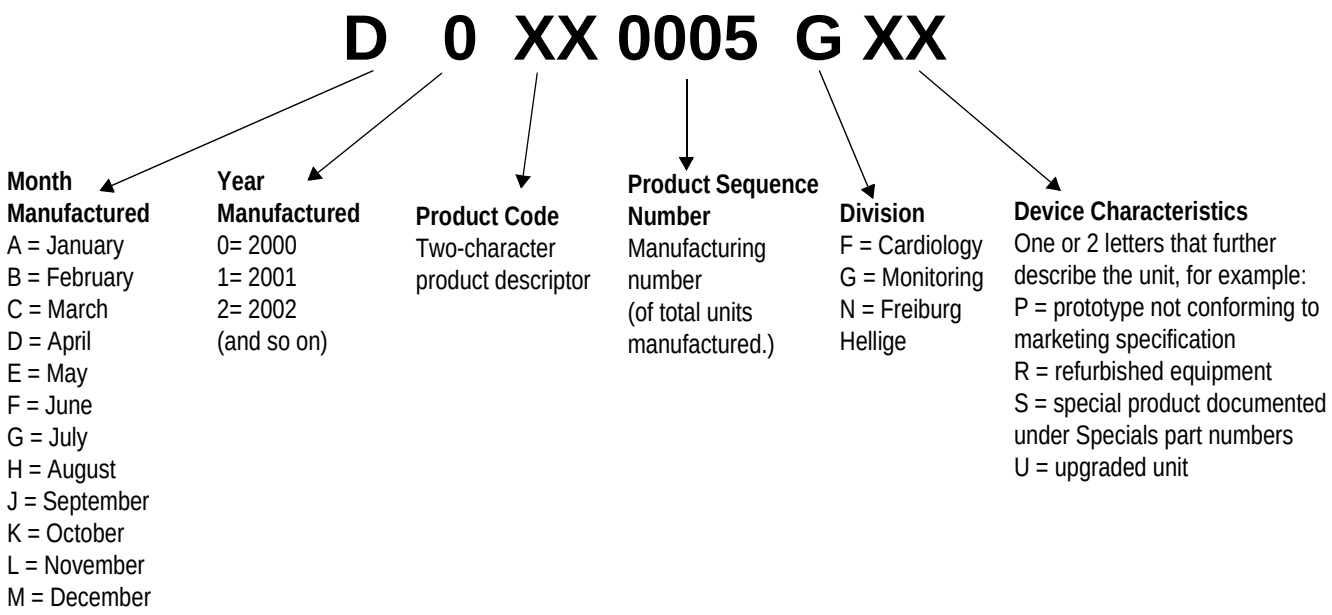

For your notes

2 Equipment Overview

For your notes

ApexPro Telemetry System Components

The ApexPro Telemetry System components include:

- Transmitter
- Antenna System
- Receiver System
- PC with Clinical Information Center (CIC) central station and ApexPro software

A transmitter is directly connected to the patient and transmits patient data via the antenna to a corresponding receiver. There is a one-to-one correspondence between transmitters and receivers. Up to 16 receivers (four quad receivers modules with four receivers on each) may reside in a Receiver System. Up to four quad receiver modules connect to the receiver backplane pcb, which is responsible for managing communications between all connected receivers and the telemetry host application software on the PC. The communication between the PC and the receiver backplane is 10BaseT Ethernet and is called the Receiver-Exchange (RX) network. The host application software then processes the patient data from the receivers and makes the patient's ECG parameter and waveform data available for display at network viewing stations or the Clinical Information Center (CIC) central station.

There are no user accessible functions in the Receiver System. It provides some configuration and diagnostic functions available to service personnel through a serial port.

ApexPro Telemetry System Block Diagram

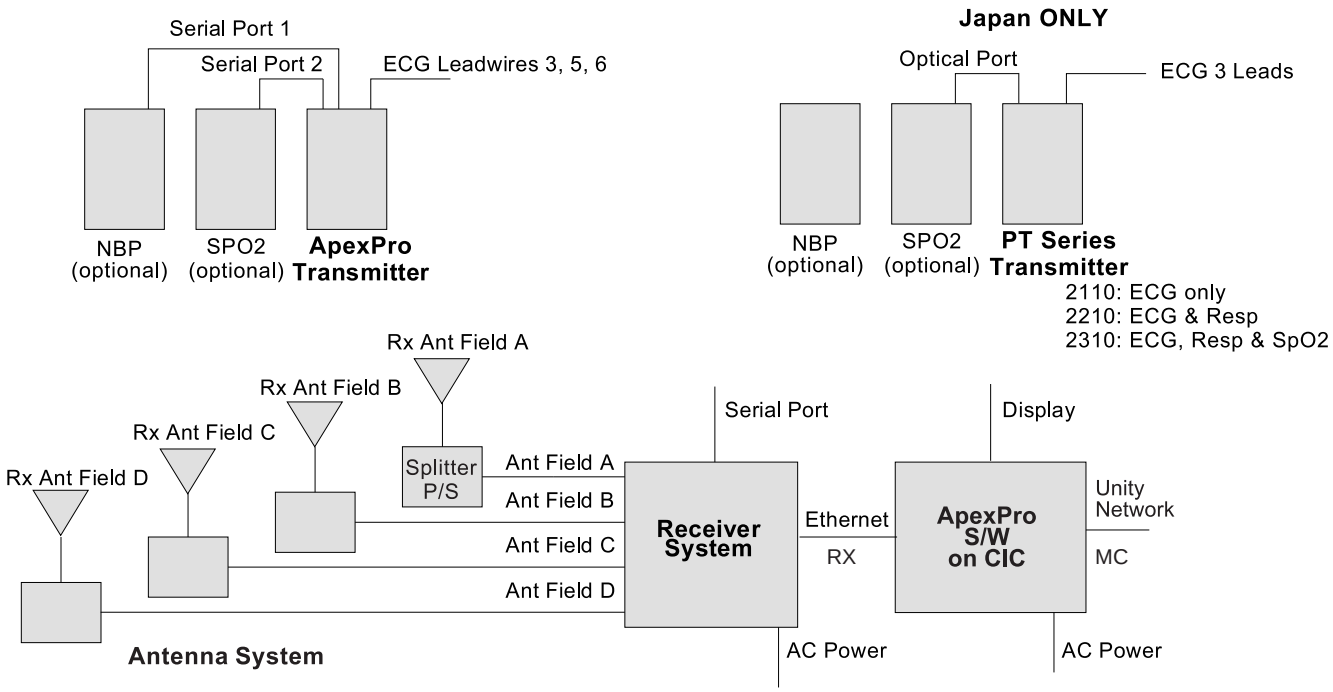

For details on the transmitter, antenna, or CIC see the corresponding service manual.

Transmitters

ApexPro Transmitter

The ApexPro transmitter is a narrow channel UHF transmitter that accepts two serial ports, and 3-, 5-, and 6-leadwire sets. A 6-leadwire set includes RA, LA, LL, Va, RL, and Vb. RL is used as the reference leadwire. The transmitter has four ECG channels containing leads II, III, Va, and Vb. The versions of the transmitter differ in the frequency range of their output; a “U.S.” frequency range (584-614MHz), and an “international” frequency range (420-460MHz).

The ApexPro transmitter acquires a patient's ECG, converts it to 10 bit resolution digital data, and serially broadcasts that information along with pace, additional parameters (from devices attached to the serial ports), and status in an RF signal. The transmitter displays battery and leadwire status along with alarm pause activation on the case LED's.

Refer to the ApexPro Telemetry Transmitter service manual for further details.

PT Series Transmitter

This transmitter is available for use in Japan only. The PT series transmitter is a narrow channel UHF transmitter that accepts one optical port device and a 3-leadwire set. The three leadwires include RA (-), LA (+), and LL (neutral). ECG Lead II is transmitted.

The PT series transmitter is available in three configurations:

- The 2110 transmitter monitors ECG only.
- The 2210 transmitter monitors ECG and respiration.
- The 2310 transmitter monitors ECG, respiration, and SpO2.

Respiration is measured by impedance using the lead set, or by temperature using an additional thermistor placed in the patient’s nose. SpO2 is acquired via an external probe that connects to a special SpO2 port on the transmitter.

The PT series transmitter acquires a patient’s ECG, converts it to 11 bit resolution digital data, and serially broadcasts that information along with pace, respiration waveform, SpO2 waveform and saturation, additional parameters (from a device attached to the optical port), and status in an RF signal. The transmitter has an on/off switch and an LCD display that indicates its status.

Antenna System

The Antenna System includes the receiver antenna and all associated components up to, but not including, the Receiver System. There are two versions of the Antenna System; one for U.S. applications (560–614MHz), and one for international applications (420–474MHz).

The Antenna System conducts information transmitted by the transmitter to the Receiver System for demodulation and waveform processing. The Antenna System increases the reception area of the receiving system allowing the patient wearing the transmitter to move over a large area.

Refer to the ApexPro Antenna System Site Survey and Installation manual for further details.

Receiver System

The Receiver System's function is to selectively receive, demodulate, and decode a specified patient's data that has been transmitted from a transmitter and broadcast on the RX network to the host application. Patient data is not stored here. The Receiver System only knows TTX numbers assigned from the host and forwards data to the host where a patient name is assigned. See "Receiver System Description" on page 2-6.

The Receiver System provides these interfaces:

- F-connector inputs receive RF signals from the four antenna fields
- RLINK Ethernet connection, called RX (receiver exchange) network, through which the host application communicates to the receiver subsystem
- RS-232 asynchronous port provides terminal support for service related functions

Host Application

The ApexPro Telemetry System host software application does not provide user accessible functions. It runs as a service under the Windows NT operating system and relies on remote user interfaces such as the CIC. The ApexPro Telemetry System host software application resides on the Prism Information Server with CIC.

The ApexPro Telemetry System host software application

- analyzes data from the receiver system,
- assigns care unit and bed numbers to each receiver from the receiver system,
- directs and controls all operations including EKpro, trends, histories, ECG processing and alarms,
- stores data to the hard drive,
- assigns a receiver number and TTX number to the receiver system upon admit,
- sends data to the Unity MC network to the appropriate CIC for patient data display.

Receiver System Description

The Receiver System receives RF signals from the four antenna inputs. These inputs are for four separate, overlapping fields. The system performs the following functions:

- filters RF (backplane)
- distributes RF to quad receiver modules (backplane)
- demodulates and decodes transmitter data (quad receiver modules)
- retrieves decoded data (backplane)
- packetizes and sends data out over RX network (backplane)

The asynchronous serial communication port is for diagnostics, service and installation information.

The RX network is directly connected by a network crossover cable to a CIC with ApexPro. The RX network should not be installed on any other network.

Receiver System Block Diagram

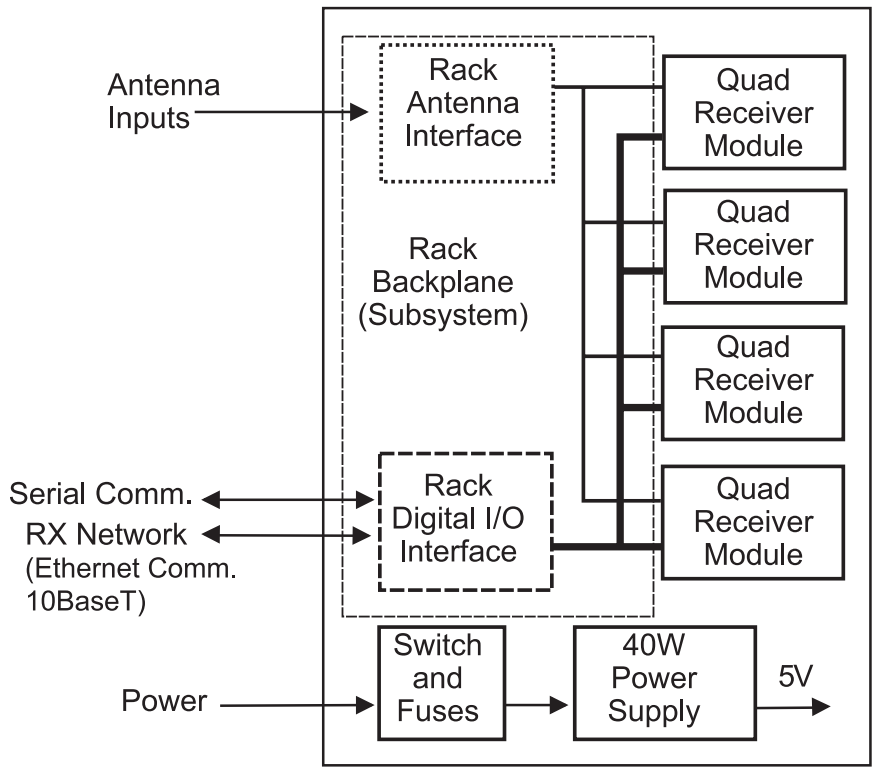

Receiver Subsystem (Backplane)

The subsystem provides an interface between the quad receiver modules and the telemetry software running on the CIC connected via 10BaseT Ethernet. The subsystem accommodates up to four quad receiver modules. The subsystem performs the initial amplification and filtering necessary on the RF input signals from the transmitter.

Quad Receiver Modules

The quad receiver module receives the GMSK modulated RF signals from the transmitter through the receiver subsystem (backplane). The RF signals are mixed to an intermediate frequency, filtered, and mixed again to baseband and re-filtered. The baseband signal is separated into its in-phase and quadrature components then sampled. The DSP takes the samples, demodulates, corrects, and decodes packets of TLINK data. The information is passed on to the receiver subsystem for further processing and transport over Ethernet. Each module has four functionally identical receivers.

Technical Specifications

Performance Specifications	
Quad Receiver Module	
Type	GMSK or GFSK digitally demodulated
Frequency range	560.025MHz to 613.975MHz (U.S.) 420MHz to 474MHz (international)
Frequency step resolution	Frequency synthesized tuning to any transmitter. 25 KHz spacing.
Frequency stability	±0.00015% of assigned channel frequency
Demodulation	GMSK (ApexPro series), GFSK (PT series)
Bit rate	10 kb/sec (ApexPro series), 7.5 kb/sec (PT series)
Sensitivity	0.8 µV (–95 dBm) minimum for 1 bit error/1 million bits received
Receiver Subsystem	
Capacity	1 to 4 quad receiver modules (4 to 16 receivers)
System status indicators	7 bicolor LEDs (green and yellow)
Network	IEEE 802.3 compatible, physical connector via 10BaseT
Serial diagnostics	19200 baud, 1 stop bit, 8 data bits, no parity, XON/XOFF flow control

Environmental Specifications	
Power requirements	85 to 264 VAC, 47 to 63 Hz
Power consumption	25 watts max with 4 quad receiver modules (85.3 BTU/hr.)
Cooling	Free convection
Operating conditions	
Ambient temperature	0°C to 40° C (32°F to 104°F)
Relative humidity	10% to 90% (non condensing)
Storage conditions	
Temperature	–40°C to 70°C (–40°F to 158°F)
Relative humidity	15% to 95% (non condensing)

Physical Specifications	
Subsystem	
Height	170 mm (6.7 in)
Width	325 mm (12.8 in)
Depth	250 mm (9.8 in)
Weight	6.4 kg (14 lb) with 4 quad receiver modules

Certification	
Receiver Unit	FCC Part 15, Subpart B Class B (U.S. only)
Subsystem	UL 2601-1 Listed. IEC 60601-1 Certified. CE Marking. Yakuji (Japanese Ministry of Health, Labour and Welfare).
Warranty	
Standard warranty is one year. Other options are available.	

For your notes

3 Installation

For your notes

Mounting Options

The mounting options for the ApexPro Telemetry System Receiver System are:

- Standard tabletop mount (four rubber feet)
- Optional rack mount for standard 19 inch network rack system with a 4U panel height (177.8mm/7in.). (Order rack mounting kit #2004232-001 separately.)

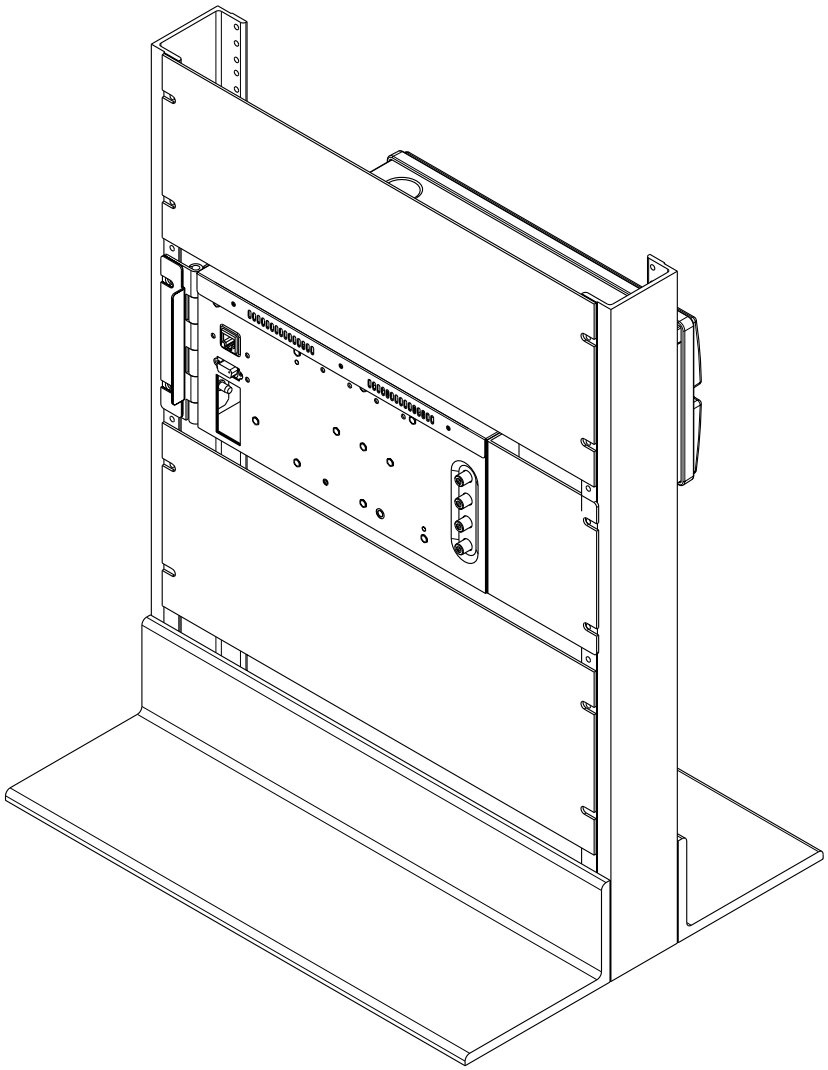

CAUTION

Mount the Receiver System securely and away from vibration. Vibration may cause patient waveform dropout at the CIC.

NOTE

If using rack mount, route all cables to the hinge side so the receivers are accessible for service. A right angle F-connector may be helpful for the coaxial cable.

Connections

Keep the following in mind when connecting the system.

- Use a dedicated connection between the RX network and the CIC with ApexPro.
- If the distance between the CIC with ApexPro and the Receiver System is less than 100 meters (328 ft.), then use point-to-point with crossover cable (null modem) connection.
- If the distance is greater than 100 meters (328 ft.) then use either an additional hub or use fiber optic cable.

NOTE

Do not connect multiple Receiver Systems on the Unity MC, IX, or RX networks. A dedicated network is critical because it is real-time unprocessed patient data.

1. Connect the RJ-45 (RX network) to the Ethernet port.
2. Connect the coaxial antenna cables to the antenna inputs (two fields minimum, required). Unused antenna input jacks need to be terminated using part number 17100-001.
3. Connect the power cord to the AC power inlet. Secure the cord with the strain relief. Plug cord into emergency AC power outlet.
4. Indicate which CIC is directly connected by labeling the Receiver System with the care unit and CIC name. Place the label near the RX Ethernet port.
5. Switch the power switch to I (on).

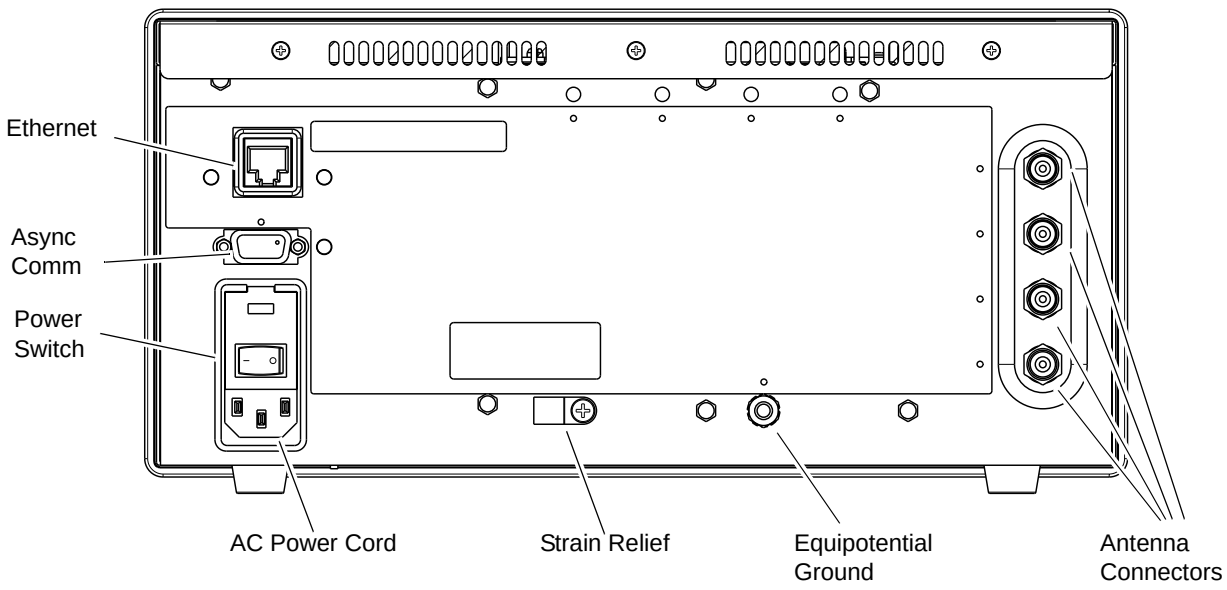

Setup

Assuming that the CIC with ApexPro and all antennas have been installed and set up, the entire system is now installed and connected.

CAUTION
Equipment damage. If receiver system software needs updating, the system LED flashes yellow while software is updating. DO NOT power down the system during a software update.

1. Using the 9-pin, serial cable (PN 2003629-001) supplied with the transmitter programming kit, connect a PC to **Async Comm** (asynchronous serial communication) for setup.
2. At the PC, use a communication program such as Hyperterminal to set up the ComPort connection. For example:

Port:	Com1 (comm port on the PC)
Speed:	Baud 19200
Parity:	No
Stop Bit:	1
Data Bits:	8
Flow Control:	Xon Xoff

3. Press **Enter** to get the @> *Enter Service Password:* prompt.
4. Type password, **mms_aps** (case-sensitive).
5. Press **Enter**.
6. At the @> prompt type **sii**.
7. Type information for the following prompts:
   - *Enter Installer's Name/ID (31 Characters MAX):*
   - *Enter Installation Date (31 Characters MAX):*
   - *Enter Rack Location (31 Characters MAX):*
8. Check the information by typing **gii** at the prompt.
9. Exit the communication program, then disconnect serial cable and PC.
10. Go to chapter 4, Maintenance and complete the Receiver System Checkout procedures to make sure the Receiver System is working properly.

For your notes

4 Maintenance

For your notes

Maintenance Schedule

Manufacturer Recommendations

To make sure the Receiver System remains in proper operational and functional order, adhered to a good maintenance schedule. The manufacturer recommends the following:

- **Visual Inspection:** Service personnel should perform a visual inspection upon receipt of the equipment, every 12 months thereafter, and prior to servicing the unit.
- **Cleaning:** Service personnel should clean the unit upon receipt of the equipment, every 12 months thereafter, and each time the unit is serviced.
- **Checkout Procedure:** Service personnel should perform the checkout upon receipt of the equipment, every 12 months thereafter, and each time the unit is serviced.

Manufacturer Responsibility

WARNING

Failure on the part of all responsible individuals, hospitals or institutions, employing the use of this device, to implement the recommended maintenance schedule may cause equipment failure and possible health hazards. The manufacturer does not, in any manner, assume the responsibility for performing the recommended maintenance schedule, unless an Equipment Maintenance Agreement exists. The sole responsibility rests with the individuals, hospitals, or institutions utilizing the device.

Visual Inspection

The Receiver System and its components should be carefully inspected prior to installation, once every 12 months thereafter and each time the equipment is serviced.

- Carefully inspect the equipment for physical damage to the case. Refer damaged equipment to qualified service personnel.
- Inspect all external connections for loose connectors or frayed cables. Have any damaged connectors or cables replaced by qualified service personnel.

Cleaning

Cleaning Precautions

Use one of the following approved solutions:

- Cidex solution, or
- Sodium hypochlorite bleach (diluted), or
- Mild soap (diluted)
- Lint-free cloth
- Dust Remover (compressed air)

To avoid damage to the equipment surfaces, *never* use the following cleaning agents:

- organic solvents,
- ammonia based solutions,
- acetone solution,
- Betadine solution,
- a wax containing a cleaning substance, or
- abrasive cleaning agents.

Exterior Cleaning

WARNING
Shock hazard. When cleaning the power unit, use a cloth dampened with cleaning alcohol on the outside of the enclosure only. Do not immerse the product in water or a safety hazard could arise during use.

Clean the exterior surfaces with a clean, lint-free cloth and one of the cleaning solutions listed above.

- Wring the excess solution from the cloth. Do not drip any liquid into open vents, switches, plugs, or connectors.

NOTE
To avoid getting liquid into connector openings, do not spray general cleaning solutions directly onto the product's surface.

- Dry the surfaces with a clean cloth or paper towel.

Receiver System Checkout

LED Status Indicators

Seven bicolor LEDs on the back of the Receiver System indicate the following:

LED	Solid Green	Flashing Green	Solid Yellow	Flashing Yellow	Blank
System Status	Normal Operation	System Initialization	System Error – System Halted	Software updating or Blink rack command at CIC	Power off
Receiver 1	Normal Operation	Module 1 Initialization	Module 1 Error	Single Receiver Error on Module 1 or Blink rack command at CIC	Not installed
Receiver 2	Normal Operation	Module 2 Initialization	Module 2 Error	Single Receiver Error on Module 2 or Blink rack command at CIC	Not installed
Receiver 3	Normal Operation	Module 3 Initialization	Module 3 Error	Single Receiver Error on Module 3 or Blink rack command at CIC	Not installed
Receiver 4	Normal Operation	Module 4 Initialization	Module 4 Error	Single Receiver Error on Module 4 or Blink rack command at CIC	Not installed
Link/ Collision	Link Established	N/A	N/A	Ethernet Collision Occurred	Not connected to host
Transmit/ Receive	N/A	Ethernet Transmission	N/A	Ethernet Reception	No transmit or receive

LED Locations

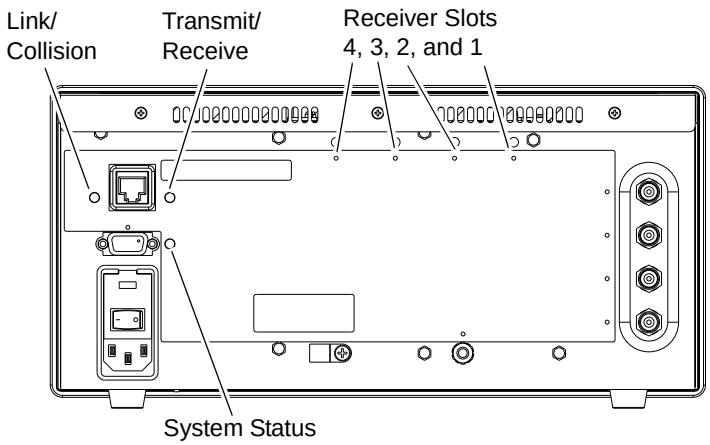

1. Switch power on.
2. Check that the **System Status**, **Transmit/Receive**, and appropriate receiver slot LEDs illuminate.

3. Verify that the **System Status** LED shows initialization status after power-up (flashing green).
4. Verify that all installed receivers initialize without error (**Receiver Slots** LEDs flashing green).
5. Verify that, after initialization, the **System Status** LED and all **Receiver Slots** LEDs are solid green.

CAUTION
Equipment damage. If receiver system software needs updating, the system LED flashes yellow while software is updating. DO NOT power down the system during a software update.

6. Verify **Link/Collision** LED is green.
7. Verify that the **Transmit/Receive** LED flashes yellow and green once every 5 seconds on first time setup. If patients are admitted on this Receiver System, then the receiver automatically transmits data (flashing green).

NOTE
After the Receiver System is powered up (power switch), it resets itself when the host connection is detected.

8. Verify that diagnostic information can be retrieved from the **Async Comm** (asynchronous serial) port via a laptop.

Ping the Receiver System

1. At the CIC with ApexPro that is connected to the Receiver System, click *Setup CIC*.
2. Select the *Service Password* tab.
3. Type the service password **mms_com**.
4. Type **ping 119.1.1.1**. (the Receiver System IP address).
5. Verify that the reply reads similar to the example.

   Pinging 119.1.1.1 with 32 bytes of data:
   Reply from 119.1.1.1: 32 bytes = 32 time <10ms TTL 255
   Reply from 119.1.1.1: 32 bytes = 32 time <10ms TTL 255
   Reply from 119.1.1.1: 32 bytes = 32 time <10ms TTL 255

   If time out message appears, refer to chapter 5, Troubleshooting.

Receiver Function

Follow all procedures sequentially to the end of this section to verify that all receivers are available and communicating with the ApexPro host application on the CIC.

1. Connect a patient simulator to a transmitter.
2. At the CIC with ApexPro, select *Setup CIC*.
3. Select the *Service Password* tab.
4. Type the password **mms_com**, then press **Enter**.
5. An MS-DOS command window opens displaying the prompt

   C:\Program Files\Marquette\CIC\X.X> (X= software version)
6. Type **cd** <space> **..\..\pts\2.X** (X= software version) and press **Enter**.
7. Verify the prompt

   C:\Program Files\Marquette\PTS\X.X> (X= software version)

Determine Number of Admitted Beds

1. At the prompt type **tools\unityviewer**.

   The *Unity Viewer* window opens.
2. In the *Unity Viewer* window click on the *Edit* menu and select *Configure*.
3. From the dropdown menu select a unity MC IP address (126.X.X.X) and click *OK*.

   The message *Waiting for network traffic...* appears.
4. In the displayed information, identify the ApexPro Unity MC IP address (see sticker on the PC unit) and click on the + (on the left) to expand.

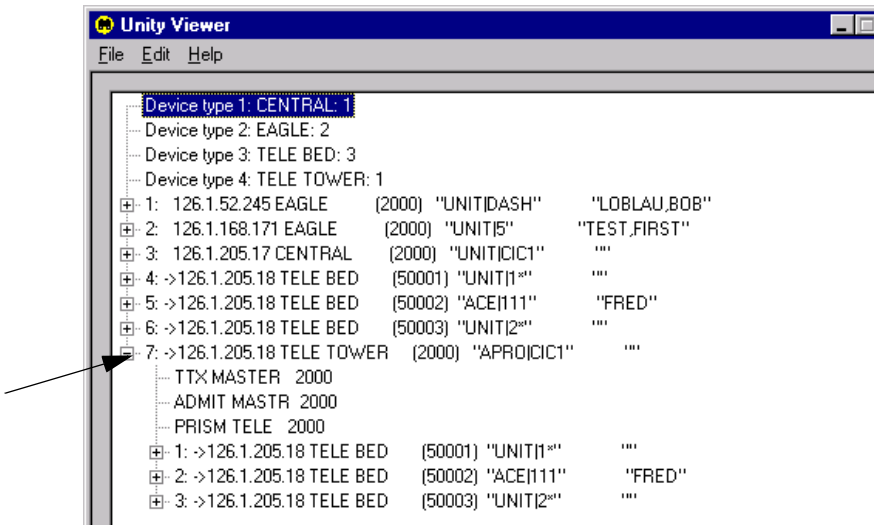

5. This displays the number of beds admitted on the PC. Note this number and close the window.

Determine Number of Unassigned Receivers

1. In the MS-DOS window at the *PTS\X.X* prompt, type **ptsconfig** and press **Enter**.

NOTE

Type **help** at any time to see a list of commands.

2. Verify new prompt, Unity MC IP address of the ApexPro application, then *C:Program Files\Marquette\PTS\X.X*.
3. Type **display receiver** and press **Enter**.
4. Note the number of unassigned receivers and subtract this number from the number of admitted beds noted above.

   The number of beds correlates to the number of receivers indicated by the number of green **Receiver Slots** LEDs on the back of the Receiver System. Four receivers per one green **Receiver Slots** LED.

1 LED =	4 receivers
2 LEDs =	8 receivers
3 LEDs =	12 receivers
4 LEDs =	16 receivers

Test Available Receivers

1. Type **admit** <space> **care unit name** <space> **bed name** <space> **patient name** <space> **TTX#** <space> **patient age**, where

   care unit name = a temporary unique name for testing

   bed name = a temporary unique name for testing

   patient name = test

   TTX# = number of transmitter using for test (Use the number in parentheses on the transmitter label or in the CIC drop-down menu, e.g., 1071.)

   age = 55

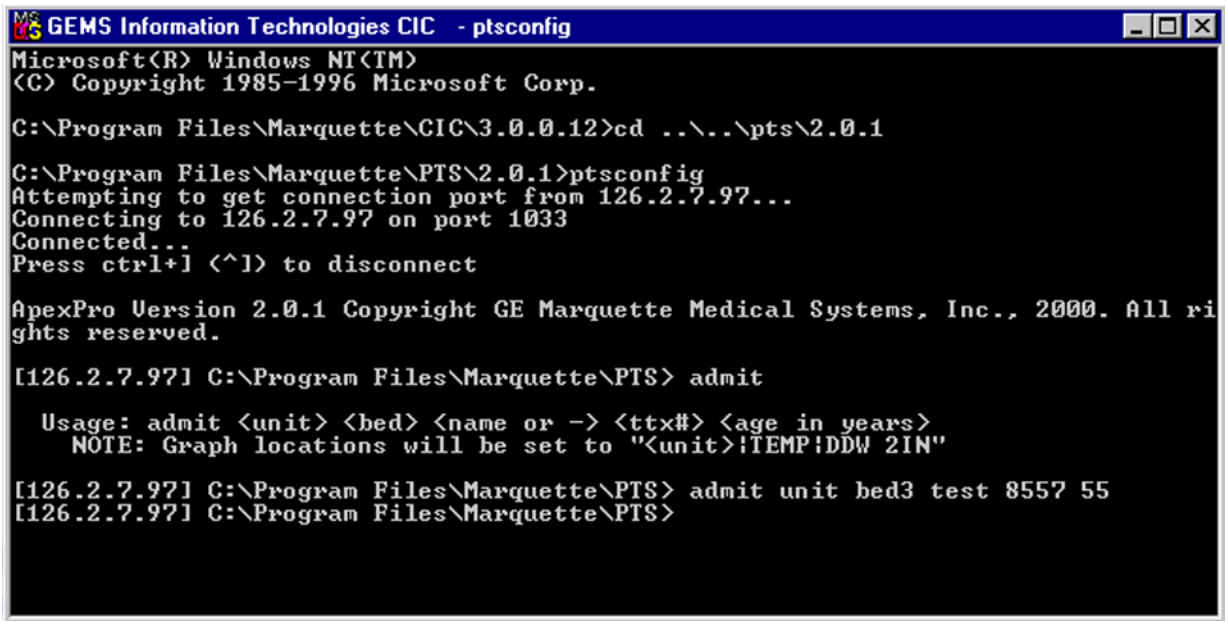

2. Press **Enter** and minimize the MS-DOS screen.
3. Right-click on an empty available bed. Select newly admitted test bed.
4. Verify ECG waveform appears without dropout.
5. Restore the MS-DOS window.
6. Type **discharge** <**unit**>|<**bed**> and press **Enter**.
7. At the message, *Are you sure you want to delete?*, type **y**.
8. Repeat these steps for all remaining receivers.

Update Maintenance Record

Use the following commands to enter maintenance information on the Receiver System.

1. Using the 9-pin, serial cable (PN 2003629-001) supplied with the transmitter programming kit, connect a PC to **Async Comm** (asynchronous serial communication).

   At the PC, use a communication program such as Hyperterminal to update any maintenance information.

2. Press **Enter** to get the @> *Enter Service Password:* prompt.
3. Type password, **mms_aps** (case-sensitive).
4. Press **Enter**.
5. At the @> prompt type **smi**.
6. Type maintenance information.
7. Check the information by typing **gmi** at the prompt.
8. Exit the communication program, then disconnect serial cable and PC.

Electrical Safety Tests

Electrical safety tests provide a method of determining if potential electrical health hazards to the patient or operator of the device exist.

Recommendations

These instructions are intended for the Receiver System.

GE Medical Systems *Information Technologies* recommends that you perform all safety tests presented in this chapter.

- upon receipt of the device,
- every twelve months thereafter,
- each time the main enclosure is disassembled or a circuit board is removed, tested, repaired, or replaced, and
- record the date and results on the “Maintenance/Repair Log” included at the end of this chapter.

WARNING
Failure to implement a satisfactory maintenance schedule may cause undue equipment failure and possible health hazards. Unless you have an Equipment Maintenance Contract, GE Medical Systems *Information Technologies* does not in any manner assume the responsibility for performing the recommended maintenance procedures. The sole responsibility rests with the individual or institution using the equipment. GE Medical Systems *Information Technologies* service personnel may, at their discretion, follow the procedures provided in this manual as a guide during visits to the equipment site.

Test Conditions

Electrical safety tests may be performed under normal ambient conditions of temperature, humidity, and pressure.

Test Equipment

The recommended test equipment required to perform electrical safety tests is listed below.

Item	Specification
Leakage Current Tester	Equivalent to the circuits shown
Digital Multimeter (DMM)	AC volts, ohms
Ground Bond Tester	0 – 1 ohm
ECG Test Body	All leads together

Power Outlet Test

Before starting the tests, the power outlet from which the monitoring device will get electrical power must be checked. This test checks the condition of the power outlet to ensure correct results from leakage tests.

For international power outlets, refer to the internal standards agencies of that particular country. Use a digital multimeter to ensure the power outlet is wired properly.

If other than normal polarity and ground is indicated, corrective action must be taken before proceeding. The results of the following tests will be meaningless unless a properly wired power outlet is used.

Ground (Earth) Integrity

Listed below are two methods for checking the ground (earth) integrity, “Ground Continuity Test” and “Impedance of Protective Earth Connection.” These tests determine whether the device's exposed metal and power inlet's earth (ground) connection has a power ground fault condition.

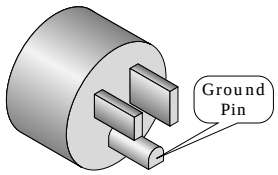

Perform the test method below that is required by your Country/Local governing safety organization.

Ground Continuity Test

Completion of this test is checked by the following steps:

1. Disconnect the device under test from the power outlet.
2. Connect the negative (-) lead of the DMM to the protective earth terminal (ground pin in power inlet connector) or the protective earth pin in the Mains plug (ground pin in power cord). Refer to the US 120Vac power cord figure above.
3. Set the DMM to the milliohm (mΩ) range.
4. Connect the positive (+) lead of the DMM to all exposed metal surfaces on the device under test. If the metal surfaces are anodized or painted, scrape off a small area in a inconspicuous place for the probe to make contact with the metal.
5. Resistance must read:
   - 0.1 ohm or less without power cord
   - 0.2 ohms or less with power cord

Impedance of Protective Earth Connection

This test, unlike a ground continuity test, will also stress the ground system by using special ground bond testers.

This test normally is only required as a manufacturing production test to receive safety agency compliance (i.e., IEC 60601-1).

Some country agencies do require this test after field equipment repairs (i.e. Germany's DIN VDE 0751 standards).

Consult your country/local safety agency if in question.

Compliance is checked by the following steps:

1. A current not less than 10A and not exceeding 25A from a current source with a frequency of 50 or 60 Hz with a no-load voltage not exceeding 6V is passed for at least 5s through the protective earth terminal or the protective earth pin in the mains plug and each accessible metal part which could become live in case of failure in basic insulation.
2. The voltage drop between the parts described is measured and the impedance determined from the current and voltage drop. It shall not exceed the values indicated.

For equipment without a power supply cord, the impedance between the protective earth terminal and any accessible metal part which is protectively earthed shall not exceed 0.1 ohms

For equipment with a power supply cord, the impedance between the protective earth pin in the mains plug and any accessible metal part which is protectively earthed shall not exceed 0.2 ohms.

When taking this measurement, move the unit's power cord around. There should be no fluctuations in resistance.

Ground (Earth) Wire Leakage Current Tests

Perform this test to measure current leakage through the ground (earth) wire of the equipment during normal operation.

NOTE

The DMM plus leakage tester network shown is the circuitry defined by the UL 544 standard for measuring leakage current.

The measuring devices, defined by various standard organizations (IEC, UL, etc.), produce almost identical test measurement results.

1. Configure the leakage tester like the circuit shown below.

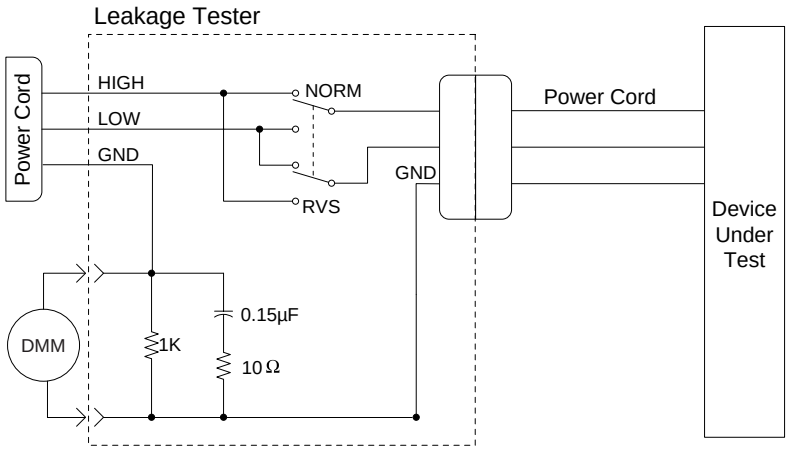

DMM set to measure AC voltage

2. Connect the power cord of the device under test to the power receptacle on the leakage tester.
3. The device under test is to be tested at its normal operating voltage.
4. Set the power switch of the device under test to ON.
5. Read the current leakage indicated on DMM.
6. Set the polarity switch on the leakage tester to RVS (reverse).
7. Read the current leakage indicated on DMM.

NOTE

If either reading is greater than the appropriate specification below, the device under test fails. Contact GE Medical Systems *Information Technologies* Technical Support.

- 300 µA (0.3 volts on the DMM), and the device under test is powered from 100-120 V/50-60 Hz
- 300 µA (0.3 volts on the DMM), and the device under test is powered from a centered-tapped 200-240 V/50-60 Hz, single phase circuit
- 500 µA (0.5 volts on the DMM), and the device under test is powered from a non-center-tapped, 200-240 V/50-60 Hz, single-phase circuit

NOTE

Center-tapped and non-center-tapped supply circuits produce different leakage currents and the UL and IEC limits are different.

8. Set the power switch of the device under test to OFF.

Enclosure Leakage Current Test

Perform this test to measure current leakage through exposed conductive surfaces on the device under test during normal operation.

1. Configure the leakage tester like the circuit shown below with GND switch OPEN and polarity switch NORM.

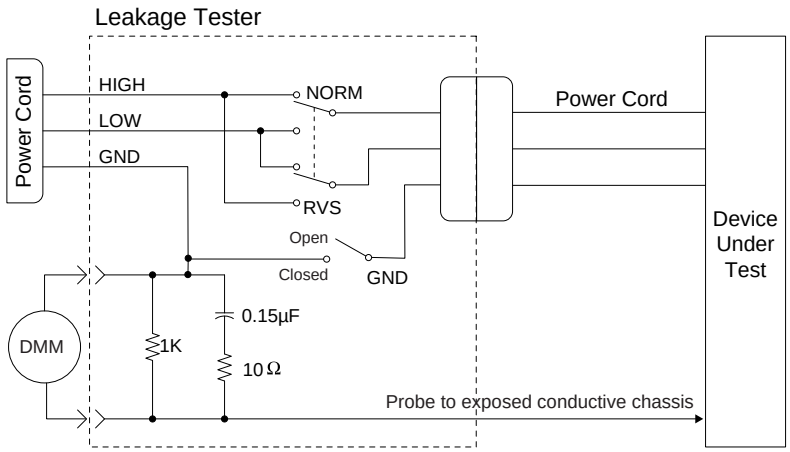

DMM set to measure AC voltage

2. Connect probe to an unpainted, non-anodized chassis ground on the unit under test.
3. Set the power switch of the device to ON.
4. Read the current leakage indicated on DMM.

NOTE

Center-tapped and non-center-tapped supply circuits produce different leakage currents and the UL and IEC limits are different.

5. Set the polarity switch to RVS.

6. Read the current leakage indicated on DMM.

   NOTE

   If either reading is greater than the appropriate specification below, the device under test fails. Contact GE Medical Systems *Information Technologies* Technical Support.

   - 300 µA (0.3 volts on the DMM), and the device under test is powered from 100-120 V/50-60 Hz
   - 300 µA (0.3 volts on the DMM), and the device under test is powered from a centered-tapped 200-240 V/50-60 Hz, single phase circuit
   - 500 µA (0.5 volts on the DMM), and the device under test is powered from a non-center-tapped, 200-240 V/50-60 Hz, single-phase circuit

7. Set the GND switch on the leakage tester to CLOSED.
8. Read the current leakage indicated on DMM.
9. Set the polarity switch to RVS.
10. Read the current leakage indicated on DMM.

    NOTE

    If the reading is greater than the specification below, and the device under test is powered from 100-240 V/50-60 Hz, the device under test fails. Contact GE Medical Systems *Information Technologies* Technical Support.

    - 100 µA (0.1 volts on the DMM), and the device under test is powered from 100-240 V/50-60 Hz

11. Set the power switch of the device under test to OFF.

Test Completion

1. Disconnect the leakage tester from the power outlet.
2. Disconnect all test equipment from the device.
3. Disconnect the device power cord from the leakage tester.

For your notes

5 Troubleshooting

For your notes

General Fault Isolation

Visual Inspection

A thorough visual inspection of the equipment can save time. Small things—disconnected cables, foreign debris on circuit boards, missing hardware, loose components—can frequently cause symptoms and equipment failures that may appear to be unrelated and difficult to track.

The following steps might seem trivial but it is highly recommended that they be performed to remove these "simple" failures as causes of problems.

- Set the ON/OFF switch to the OFF position and disconnect the Receiver System from its power source.
- Refer to the Disassembly Guidelines in Chapter 6, Parts Lists and Drawings and perform an internal visual inspection of the components.

Take the time to make all the recommended visual checks (refer to the visual inspection table below) before starting any detailed troubleshooting procedures.

Visual Inspection Table

Area	Look for the following problems:
I/O Connectors and Interface Cables	■ Fraying or other damage ■ Bent prongs or pins ■ Cracked housing ■ Loose screws in plugs ■ Excessive cable tension or wear ■ Secure mounting hardware
Internal Harnesses and Cables	■ Excessive tension or wear ■ Loose connection ■ Strain reliefs out of place
Circuit Boards	■ Moisture, dust, or debris (top and bottom) ■ Loose or missing components ■ Burn damage or smell of over-heated components ■ Socketed components not firmly seated ■ PCB not seated properly in edge connectors ■ Solder problems: cracks, splashes on board, incomplete feedthrough, prior modifications or repairs
Ground Wires/Wiring	■ Loose wires or ground strap connections ■ Faulty wiring ■ Wires pinched or in vulnerable position
Mounting Hardware	■ Loose or missing screws or other hardware, especially fasteners used as connections to ground planes on PCBs ■ Receiver System mounted loosely or near vibration
Power Source	■ Faulty wiring, especially AC outlet ■ Circuit not dedicated to system (Power source problems can cause static discharge, resetting problems, and noise.)

AC Line Voltage Test

This test verifies that the domestic wall outlet supplying power to the equipment is properly wired. For international wiring tests, refer to the internal standards agencies of that particular country.

120 VAC, 50/60 Hz

Use a digital voltmeter to check the voltages of the 120-volt AC wall outlet (dedicated circuit recommended). If the measurements are significantly out of range, have a qualified electrician repair the outlet. The voltage measurements should be as follows:

1. 120 VAC (± 10 VAC) between the line contact and neutral and between the line contact and ground.
2. Less than 3 VAC between neutral and ground.

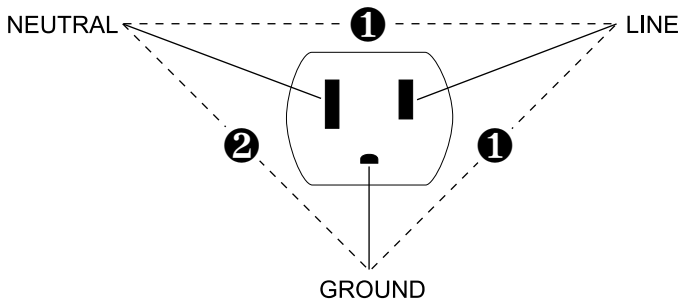

240 VAC, 50/60 Hz

Use a digital voltmeter, set to measure at least 300 VAC, to check the voltages of the NEMA 6-20R, AC wall outlet (dedicated circuit recommended). If the measurements are significantly out of range, have a qualified electrician repair the outlet. The voltage measurements should be as follows:

1. 120 VAC (± 10 VAC) between either “hot” contact and ground.
2. 210 to 230 VAC between the two “hot” contacts.

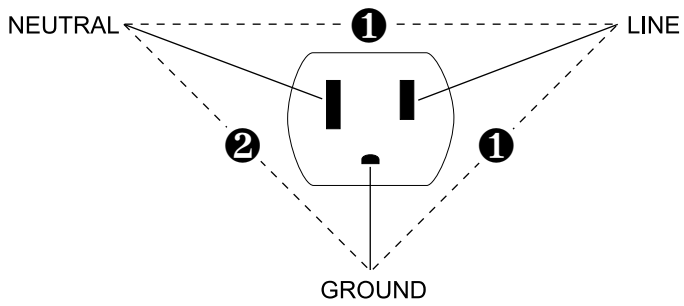

Troubleshooting Procedure

Check LEDs

LED	Solid Green	Flashing Green	Solid Yellow	Flashing Yellow	Blank
System Status	Normal Operation	System Initialization	System Error – System Halted	Software updating or Blink rack command at CIC	Power off
Receiver 1	Normal Operation	Module 1 Initialization	Module 1 Error	Single Receiver Error on Module 1 or Blink rack command at CIC	Not installed
Receiver 2	Normal Operation	Module 2 Initialization	Module 2 Error	Single Receiver Error on Module 2 or Blink rack command at CIC	Not installed
Receiver 3	Normal Operation	Module 3 Initialization	Module 3 Error	Single Receiver Error on Module 3 or Blink rack command at CIC	Not installed
Receiver 4	Normal Operation	Module 4 Initialization	Module 4 Error	Single Receiver Error on Module 4 or Blink rack command at CIC	Not installed
Link/ Collision	Link Established	N/A	N/A	Ethernet Collision Occurred	Not connected to host
Transmit/ Receive	N/A	Ethernet Transmission	N/A	Ethernet Reception	No transmit or receive

If. . .	Then. . .
No LEDs On	1. Check the AC source for power. 2. Check the internal fuse. 3. Check the 5V power supply. 4. Cycle power.
Transmit/Receive LED flashes yellow every 5 seconds	Using the **Async Comm** port 1. Check the IP address (GIP command). 2. Set IP address, if necessary (SIP command)
Receiver module LED is flashing yellow	See the Problems/Solutions table on the next page.

Problems/Solutions

Refer to Theory of Operation in this manual for circuit board functions. Refer to the Disassembly Guidelines in Chapter 6, Parts Lists and Drawings to disassemble the unit.

Problem	Cause	Solution
Message "No receivers available" displays at the CIC or unable to ping the receiver.	Receiver System not connected to the Prism server.	Check that the RX network connection is good at both the Prism server and the Receiver System. Receiver System is connected to the wrong NIC at the CIC. (Refer to the Prism Information Server Service Manual.)
	Cross over cable is not used between the Receiver System and Prism server.	The RX network must be a peer-to-peer connection. Use a network cross over cable if no hub is used.
	The IP address has been modified.	1. Connect a PC to the **Async Comm** port on the Receiver and enter the communication program using the password **mms_aps**. (See chapter 3, Installation for serial setup.) 2. Type the command **gip** and press **Enter**. The displayed IP address should be *119.1.1.1*. 3. If the address is not correct, type **sip** and press **Enter**. 4. Type **119.1.1.1**, then reboot the Receiver System.
	Care unit on the CIC doesn't match the Receiver System configuration.	Run *PTSCONFIG.exe* at the CIC to configure the *Modify Receivers* command. (Refer to the Prism Information Server Service Manual.)
Need to determine which Receiver System is connected to a certain CIC/ ApexPro PC.		Use the service diagnostic tool *PTSCONFIG* at the CIC to flash the System Status LED on the receiver for 5 minutes. For example, *blink rack 126.x.x.x 5*
Cannot admit beds to the Receiver System. Need to associate a care unit/bed# to a receiver in a given rack.		Use the service diagnostic tool *PTSCONFIG* at the CIC and the command **blink patient unit|bed***.
The IP address in the *lw* (listnetwork) doesn't match the labels on the Prism server.		Check that the IP labels match numbers in Windows NT, CIC, and ApexPro. 1. Use the service diagnostic tool *PTSCONFIG* at the CIC and the command **ipconfig**. 2. Verify that there are four IP addresses in the list. (Two MC 126.x.x.x addresses, one for CIC and one for ApexPro; IX 121.x.x.x or hospital IP; RX 119.1.1.2)
Dropout of patient waveform.	Vibration	

Event Logs

Events can be stored in two locations, the receiver system and the ApexPro host hard drive.

Receiver System Event Logs

Events logged to the receiver system are stored in flash memory and can be retrieved via the diagnostic service port. The system stores the events in two flash memory sectors. When the event storage maximum is reached, and a new event occurs, the flash sector with the oldest events is erased. New events are stored to that sector.

Access the receiver system event logs as follows.

1. Using the 9-pin, serial cable (PN 2003629-001) supplied with the transmitter programming kit, connect a PC to **Async Comm** (asynchronous serial communication).
2. At the PC, use a communication program such as Hyperterminal to set up the ComPort connection.
3. Press **Enter** to get the @> *Enter Service Password:* prompt.
4. Type password, **mms_aps** (case-sensitive).
5. Press **Enter**.

There is no command to view how many events are stored, but typically the most recent event will be examined first. Event 1 is the first (oldest) stored event.

Use the **del** (display error log) command with a parameter of 999 to determine the number of events stored. Since 999 is greater than the number of events that can be stored, the command errors and reports the number of events in the system.

6. At the @> prompt type **del 999** and press **Enter**. The following displays.

   @> del 999
   Record not present, XXX *records stored in system*.

   NOTE
   "XXX" is representative of the number of events stored in the error log. It will appear on screen as an actual number.

7. At the @> prompt type **del XXX** (where XXX equals the number of events as indicated in the error message) and press **Enter** to display the most recent event.

Other commands include:

- Type **,** (comma) and press **Enter** to display the previous log entry.
- Type **.** (period) and press **Enter** to display the next log entry.
- Type **dael** and press **Enter** to dump all entries. This is useful in conjunction with the "capture-to-file" feature of Hyperterminal.

The following is an example of the information in each event log.

Record Number 244

Date/Time:	1 January 2000 00:00
Error Code:	0x438a
Severity:	4
Error Text:	Set fields for rcvr 15 to 15
Process Name:	sysstart
Status Register:	0x9042
User Stack Pointer:	0xff0902c8
Program Counter:	0xff013a24
Super Stack Pointer:	0xffcbffe8
Heap Pointer:	0xff0c8554
Passed Parameter:	15
Error Number:	60544
Ticks:	525

The date and time are set by the Unity Information Server. If the date and time have not been updated by the time the event occurs, the time defaults to 1 January 1990 00:00.

The error text explains the error code.

The severity levels are:

4 = An event occurred, not an error

5 = A minor error

6 = An error that caused the system to halt

7 = An error that caused the system to reset

The number of ticks indicates when the event occurred relative to the last time the system was rebooted. There are 60 ticks in one second.

The *Passed Parameter*, in most cases but not all, indicates which receiver in the system logged the event. The receivers are indexed starting with 0.

ApexPro Host Event Logs

The receiver system also sends events to the ApexPro host. The ApexPro host stores event logs only when the receiver system is connected to the ApexPro host. Refer to the CIC and Unity Information Suite (IS) Server Service Manual for information on obtaining the logs from the ApexPro host.

Event logs may be requested by Tech Support to help diagnose the problem. The easiest way to save the logs to diskette is from the ApexPro host. Refer to the CIC and Unity Information Suite (IS) Server Service Manual for more information.

For your notes

6 Parts Lists and Drawings

For your notes

Input/Output Connectors and Signals

F-Connectors, J1, J2, J3, and J4

Pin	Description
J1	Antenna A field input
J2	Antenna B field input
J3	Antenna C field input
J4	Antenna D field input

RJ-45 Ethernet Port, J6

Pin	Description
1	HOST_XMIT_POS
2	HOST_XMIT_NEG
3	HOST_RCV_POS
4	N/C
5	N/C
6	HOST_RCV_NEG
7	N/C
8	N/C

RS-232 Async Comm Port, J15

Pin	Description
1	N/C
2	TX
3	RX
4	N/C
5	DGND
6	N/C
7	N/C
8	N/C
9	N/C

Input Power Plug, J16

Pin	Description
1	GND
2	GND
3	GND
4	+5V
5	+5V
6	+5V

Disassembly Guidelines

General

WARNING
Patient monitoring interruption. Make sure a patient is not being monitored.

When removing the receiver subsystem pcb, use the following tools:

- 3-4 inch Phillips head screwdriver
- 12 inch Phillips head screwdriver
- 1/2 inch crescent wrench

PCB Assemblies

CAUTION
Solder multilayer and surface mount PCB assemblies at your own risk! Improper repair methods can damage the PCB assemblies even further and void the warranty. Only qualified service personnel with the proper laboratory equipment should attempt to repair PCB assemblies.

Observe the following guidelines when handling all PCB assemblies.

- Take precautions against electrostatic discharge damage.
- Handle all PCB assemblies by their edges.

Hardware

- Before disassembly, note the positions of any wires or cables, marking them if necessary to ensure that they are replaced correctly.
- Gray ribbon cables have retainer clips holding them in the connector.
- Save and set aside all hardware for re-assembly.

Replace the Fuse

1. Open the door on the AC inlet module to access the fuse holder.
2. Remove two fuses and replace with new on each side of the holder.
3. Close the AC inlet module doors.

Open the Unit

CAUTION
Equipment damage. Power must be off to add or remove any internal assemblies or circuit boards.

1. Turn the unit OFF at the rear power switch and disconnect the AC power cord and all communication cables.
2. Remove 2 screws from the front cover.
3. Remove cover and set aside.

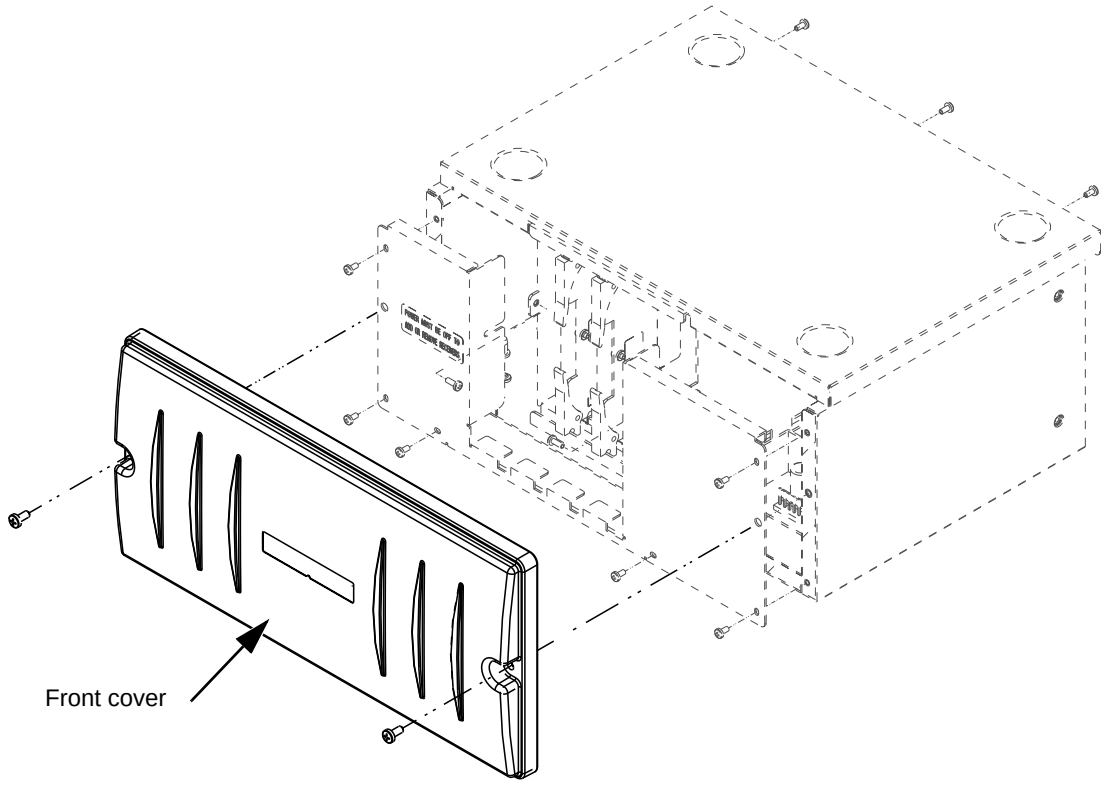

Remove a Quad Receiver Module

CAUTION
Equipment damage. Do not remove or install Quad Receiver Modules with power applied.

1. Remove the front cover as described above.
2. Unseat the quad receiver module by pulling the two retaining clips away from the module.
3. Pull module straight out of chassis.

Add a Quad Receiver Module

1. Remove the front cover as described above.
2. Position a quad receiver module with the protruding side (with label) facing the right side of the chassis.
3. Slide the protruding edge into the upper and lower chassis track.
4. Keep the retaining clips fully extended until the outer edges meet the receiver cage.
5. Fold the retaining clips inward, seating the module into the connector.

NOTE
Do not force the module or retaining clips. If it does not seat easily, the module may be upside down.

6. Replace the front cover.

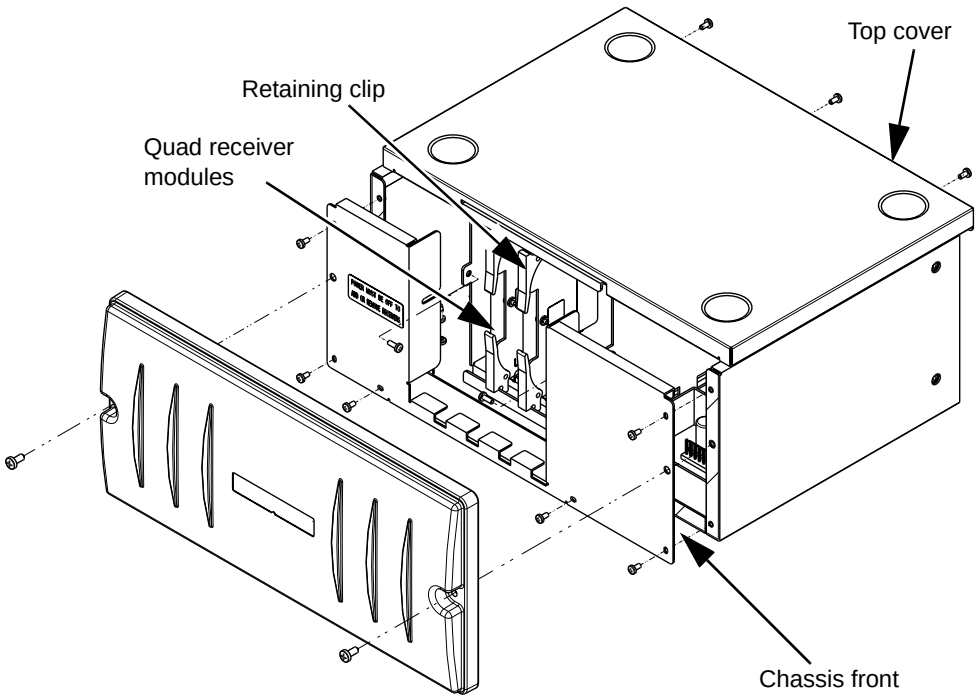

Remove/Replace the Power Supply Assembly

1. Remove the front cover as described above.
2. Remove 3 screws from the upper rear of the top cover.
3. Remove top cover.
4. Disconnect the power supply harness from the receiver subsystem pcb.
5. Remove 4 screws holding the power supply to the chassis assembly.
6. Remove power supply.
7. Reverse the above steps to install a power supply assembly.

Remove/Replace Receiver Subsystem PCB (Backplane)

1. Remove the front cover as described above.
2. Remove 3 screws from the upper rear of the top cover.
3. Remove top cover.
4. Remove all quad receiver modules.
5. Remover 6 screws from chassis front.
6. Using a short screwdriver loosen 2 screws inside the receiver cage.
7. Pull chassis front straight out.
8. Using a long screwdriver remove 4 screws holding receiver cage to receiver subsystem pcb.
9. Remove receiver cage.
10. Disconnect the power supply harness from the receiver subsystem pcb.
11. At the outside rear of the chassis assembly remove 4 hex nuts and washers.
12. Remove 7 screws holding pcb to chassis assembly.
13. Remove the receiver subsystem pcb.
14. Reverse the above steps to install a receiver subsystem pcb.

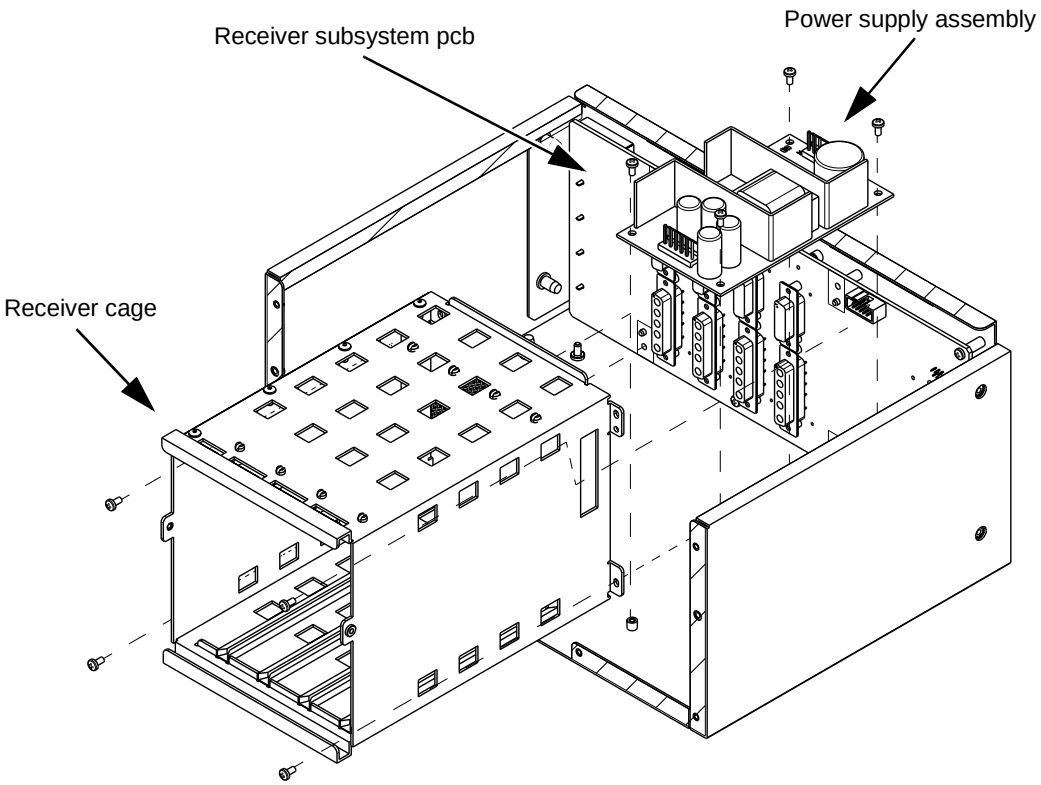

Close and Reconnect Unit

1. Position the front cover and install 2 screws.
2. Reconnect the power cord and all communication cables.
3. Refer to Chapter 4, Maintenance, and perform Checkout and Electrical Safety Test procedures.

Ordering Parts

General

The parts lists and assembly drawings in this chapter supply enough detail for you to order parts for the assemblies considered field serviceable. If you require additional information or troubleshooting assistance, contact Tech Support. Schematic diagrams are provided in the next chapter.

To order parts, contact Service Parts at the address or telephone number listed on the "How to Reach Us..." page found at the front of this manual.

Field Replaceable Units

The tables below list the most commonly replaced assemblies ordered in the service spare circuit board kits. See the operator's manual for a complete list of accessories and expendable supplies.

Field Replaceable Units	
Item	**Part Number**
Receiver System PCB Assembly, U.S. Receiver System PCB Assembly, international	801632-001 801632-002
Power Supply Assembly	422816-001
Receiver Module, U.S. (560-614MHz) Receiver Module, international (420-474 MHz)	419525-001 419525-002
Fuse	1910-100
Rack Mounting Kit	2004232-001

Receiver System 422200-001C and -002A*

Find Num	Item Number	Item Description	Qty
1	1747-998	SOCKET JACKSCREW D CONN	2
2	422197-001	ASSEMBLY RECEIVER CAGE	0
3	422198-001	ASSY TELEMETRY CHASSIS	0
4	422199-001	CHASSIS FRONT	0
5	422201-001	CHASSIS TOP COVER	0
6	422202-002	COVER FRONT SUBSYSTEM APEXPRO	1
7	422206-001	SHLD PC MOUNT BACKPLANE	1
9	415363-001	CLAMP CABLE	1
10	420205-001	AC INLET MDL CONN/SW/DUAL FZ	1
11	419575-002	CHOKE ASSEMBLY 6.5 LG	1
12	400040-001	PLUG MC EQUIPOTENTIAL	1
13	2002333-001	HARN PS/PWR MODULE	1
14	2002335-001	HARN PS/MAIN PCB	1
15	80307-058	WIRE 16GA GN/Y 1.5L	1
16	411323-001	NUT HEX KEPS M3-.5 CLASS 8 ZP	3
17	57531-006	SPACER 40ID X .105L	4
18	1886-901	NUT HEX 3/8-32	8
19	1886-902	WASHER	4
20	801632-001 *801632-002	PCB APEXPRO RCVR SUBSYS 560-614 MHZ PCB APEXPRO RCVR SUBSYS 420-474 MHZ	1
21	2000540-001	SCR MACH PNHD M3X6LG SST W/THD LOCK	26
22	412048-001	WASHER LOCK M3 EXT TOOTH	1
23	422816-001	PWR SUPPLY SW 40W/+5V	1
24	4640-808	SCREW BLK W/WSHR 8-32 X 1/2	2
25	2000819-001	LENSE LED CLEAR PANEL MOUNT	7
26	2000820-001	LENSE LITEPIPE .125 DIA X .40 LONG	7
27	2000821-001	LENSE RETAINING RING	7
28	411061-001	SCREW SEMS M4- .7X10	1
29	400041-001	WASHER LOCK SERRATED F/M-6	1
30	422206-002	SHLD PC MOUNT BACKPLANE	1

Find Num	Item Number	Item Description	Qty
31	404525-001	LABEL BLANK 2 X 3/4	1
32	2003695-001	GASKET FOAM SHIELD	1
33	404525-006	LABEL BLANK 2.6IN X.4IN	1
34	2004054-001	LABEL ADH SERVICE CAUTION	1
35	1910-100	FUSE 3AG 1A SB	2
36	2005835-001	SHLD COVER APEXPRO SUBSYSTEM	0
37[1]	2006127-001	LABEL APEXPRO TLMY SUBSYSTEM PROD MARK	0
38[1]	2006126-001 2006126-002 2006126-003 2006126-004 2006126-005 2006126-006 2006126-007 2006126-008 2006126-009 2006126-010 2006126-011 2006126-012 2006126-013 2006126-014 2006126-015	LABEL APEXPRO TLMY SS CONN/UL/CE ENG LABEL APEXPRO TLMY SS CONN/UL/CE GER LABEL APEXPRO TLMY SS CONN/UL/CE FRE LABEL APEXPRO TLMY SS CONN/UL/CE SWE LABEL APEXPRO TLMY SS CONN/UL/CE SPA LABEL APEXPRO TLMY SS CONN/UL/CE ITA LABEL APEXPRO TLMY SS CONN/UL/CE DUT LABEL APEXPRO TLMY SS CONN/UL/CE DAN LABEL APEXPRO TLMY SS CONN/UL/CE NOR LABEL APEXPRO TLMY SS CONN/UL/CE JAP LABEL APEXPRO TLMY SS CONN/UL/CE POR LABEL APEXPRO TLMY SS CONN/UL/CE RUS LABEL APEXPRO TLMY SS CONN/UL/CE CHI LABEL APEXPRO TLMY SS CONN/UL/CE HUN LABEL APEXPRO TLMY SS CONN/UL/CE POL	0
39	422159-085	LABEL CARTON APEXPRO TELEMETRY SUBSYSTEM	1
40	80274-007	CABLE POWER CORD 125V 6FT SE	1
41	99014-001	BAG INTISTATIC POLY 18 X 20	1
42	422774-016	PACKAGING ENCLOSURE 16.5 X 12.75 X 9.5	0
43	2004051-001	PACKAGING INSERT TOP	0
44	2004052-001	PACKAGING INSERT BOTTOM	0
45	404525-001	LABEL BLANK 2 X 3/4	1
46	419525-001 419525-002	ASSY APEXPRO QUAD RCVR MOD 560-614 MHZ ASSY APEXPRO QUAD RCVR MOD 420-474 MHZ	1
47	2001982-001	PCB TERMINATOR	3

1. Refer to Label Kits parts list 2002068 on the next page to order these labels.

Label Kits 2002068-0XX

Item Number	Item Description
2002068-001	LABEL KIT APEXPRO TLMY SUBSYSTEM ENG
2002068-002	LABEL KIT APEXPRO TLMY SUBSYSTEM GER
2002068-003	LABEL KIT APEXPRO TLMY SUBSYSTEM FRE
2002068-004	LABEL KIT APEXPRO TLMY SUBSYSTEM SWE
2002068-005	LABEL KIT APEXPRO TLMY SUBSYSTEM SPA
2002068-006	LABEL KIT APEXPRO TLMY SUBSYSTEM ITA
2002068-007	LABEL KIT APEXPRO TLMY SUBSYSTEM DUT
2002068-008	LABEL KIT APEXPRO TLMY SUBSYSTEM DAN
2002068-009	LABEL KIT APEXPRO TLMY SUBSYSTEM NOR
2002068-010	LABEL KIT APEXPRO TLMY SUBSYSTEM JAP
2002068-011	LABEL KIT APEXPRO TLMY SUBSYSTEM POR
2002068-012	LABEL KIT APEXPRO TLMY SUBSYSTEM RUS
2002068-013	LABEL KIT APEXPRO TLMY SUBSYSTEM CHI
2002068-014	LABEL KIT APEXPRO TLMY SUBSYSTEM HUN
2002068-015	LABEL KIT APEXPRO TLMY SUBSYSTEM POL

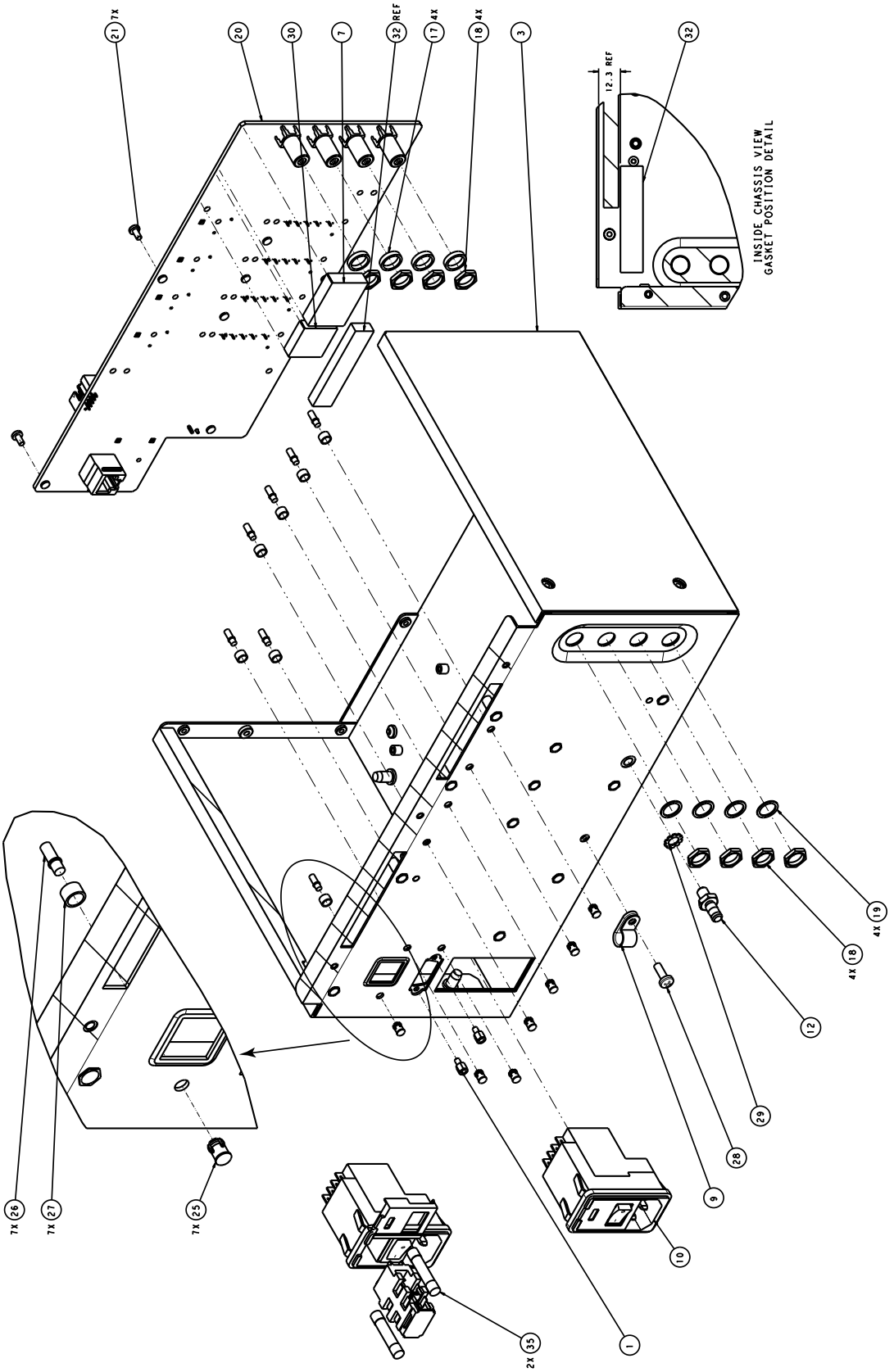
21 7X
20
30
7
32 REF
17 4X
18 4X
3
32
12.3 REF
INSIDE CHASSIS VIEW
GASKET POSITION DETAIL
4X 19
4X 18
12
29
28
9
10
1
2X 35
7X 26
7X 27
7X 25

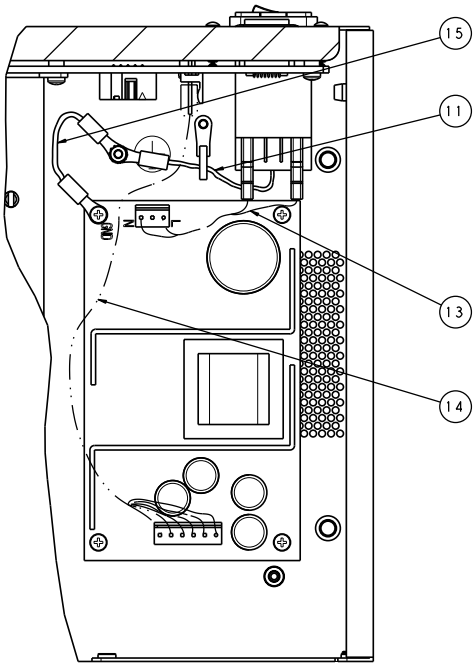

WIRE HARNESS ROUTING DETAIL

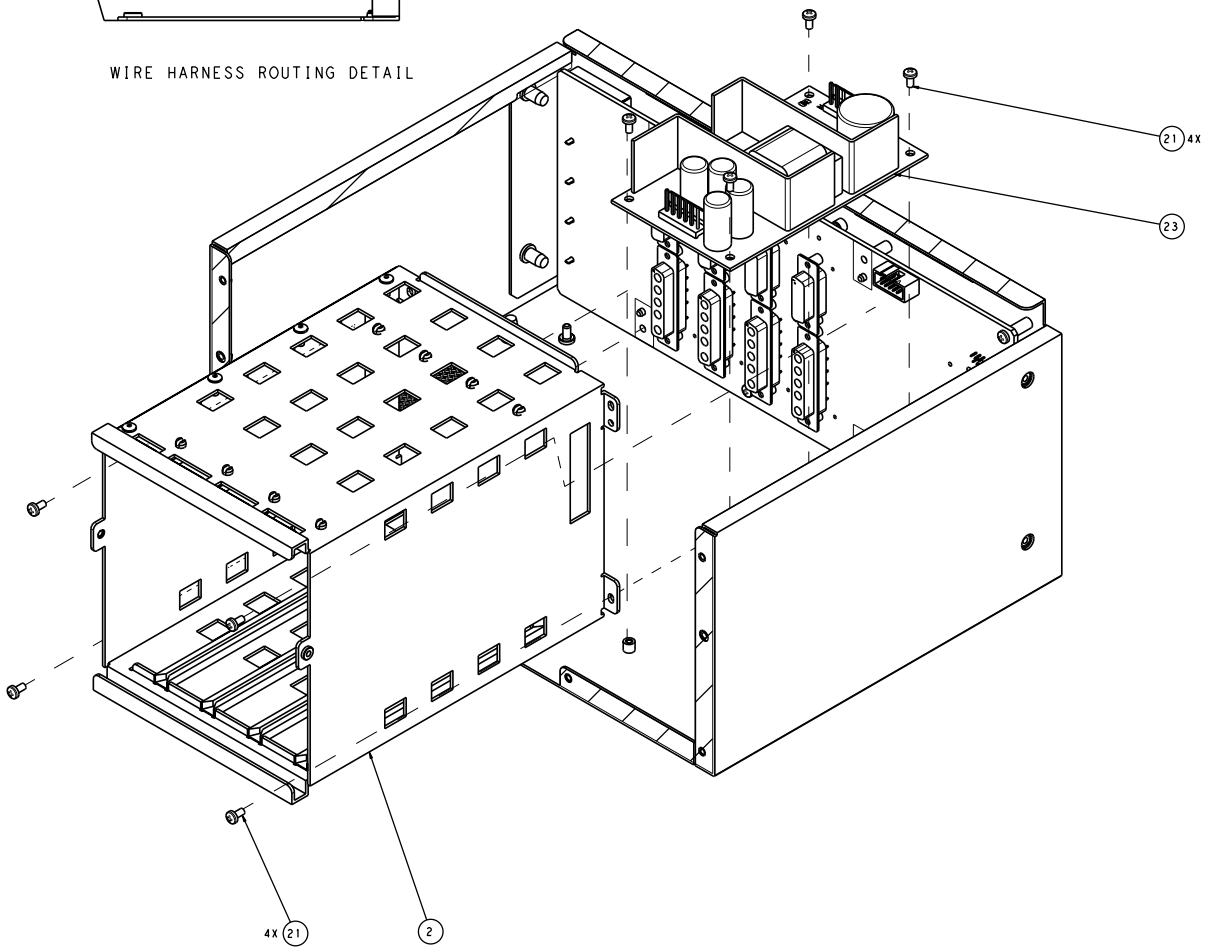

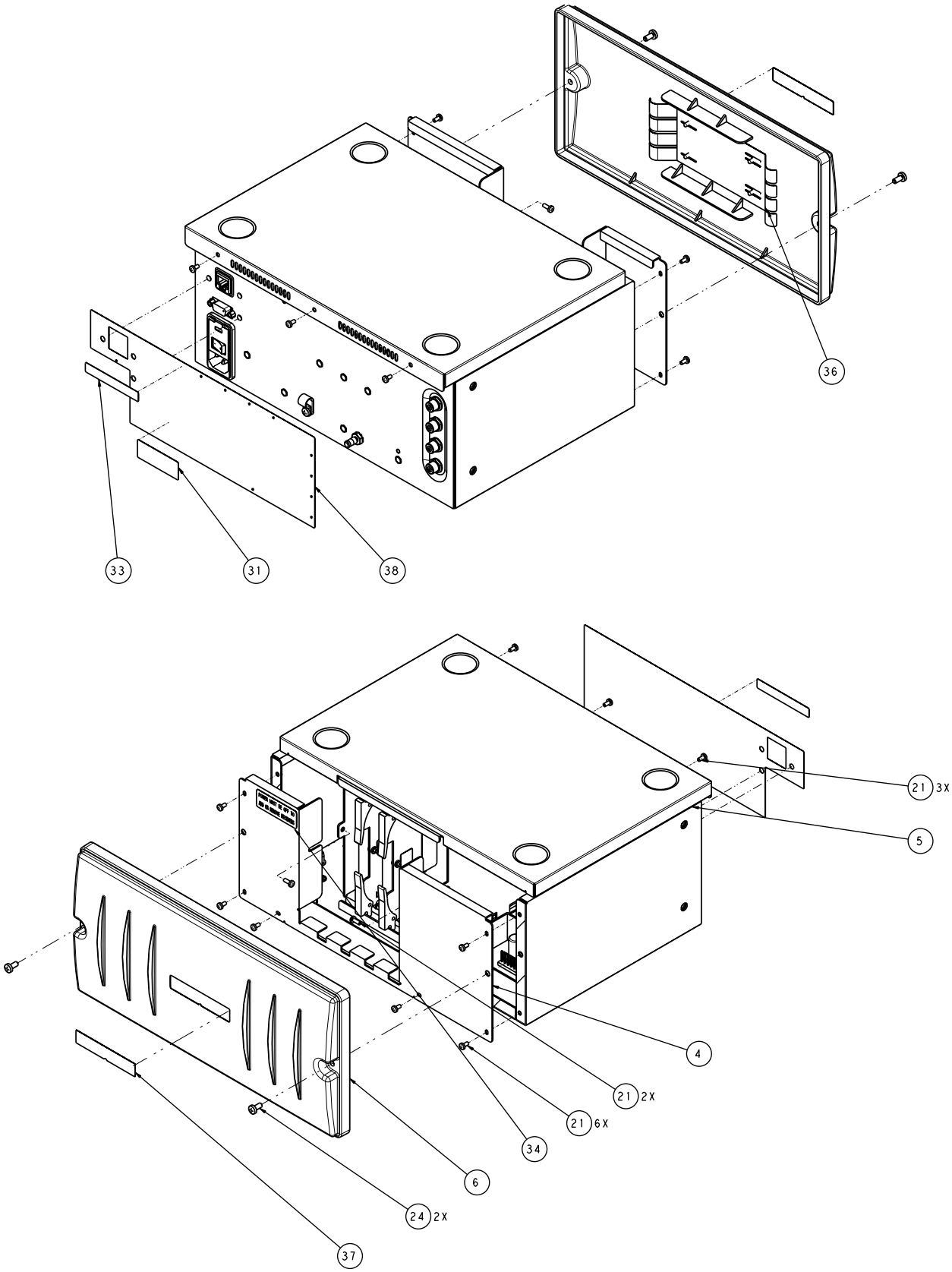
36
33
31
38
21 3X
5
4
21 2X
21 6X
34
6
24 2X
37

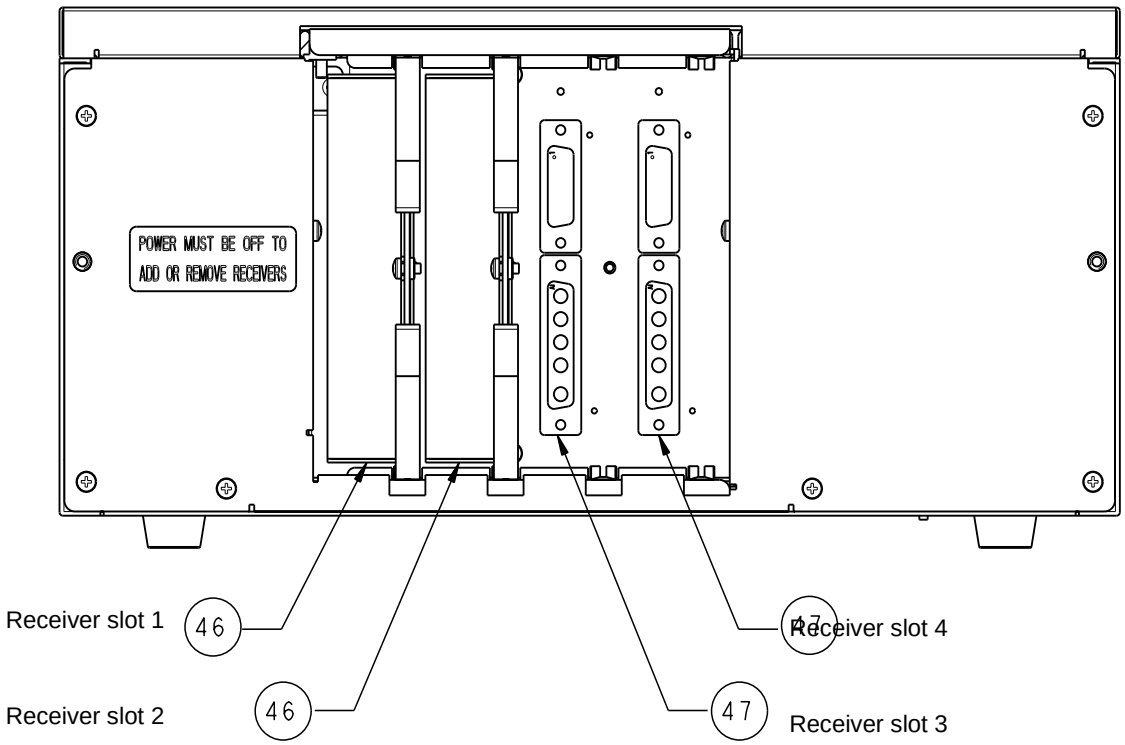

Detailed view of item 47

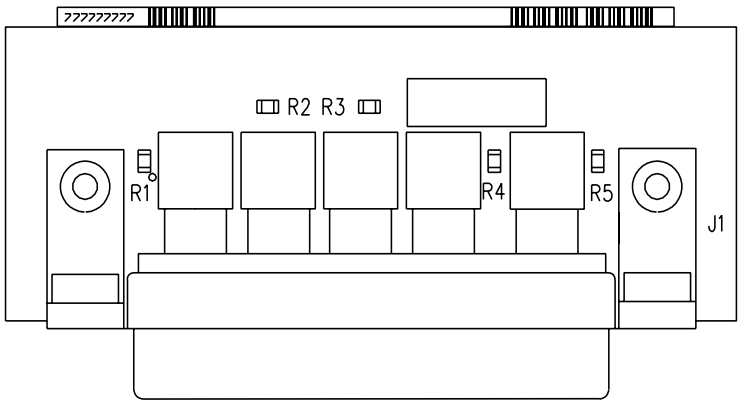

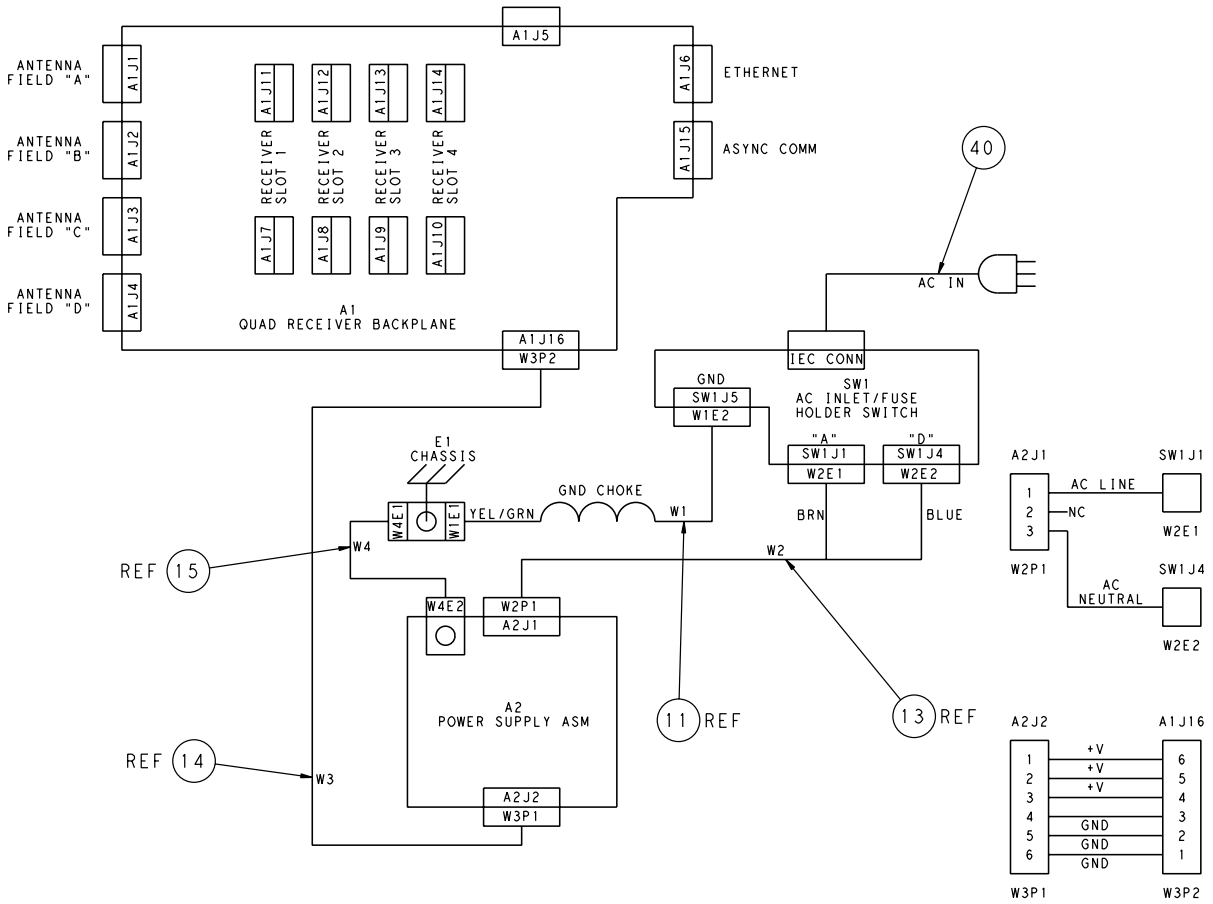
A1J5
ANTENNA FIELD "A"
A1J1
ANTENNA FIELD "B"
A1J2
ANTENNA FIELD "C"
A1J3
ANTENNA FIELD "D"
A1J4
A1J11
A1J12
A1J13
A1J14
RECEIVER SLOT 1
RECEIVER SLOT 2
RECEIVER SLOT 3
RECEIVER SLOT 4
A1J7
A1J8
A1J9
A1J10
A1
QUAD RECEIVER BACKPLANE
A1J6
ETHERNET
A1J15
ASYNC COMM
40
AC IN
A1J16
W3P2
IEC CONN
SW1
AC INLET/FUSE
HOLDER SWITCH
GND
SW1J5
W1E2
"A"
SW1J1
W2E1
"D"
SW1J4
W2E2
E1
CHASSIS
GND CHOKE
W4E1
W1E1
YEL/GRN
W1
BRN
BLUE
W2
W4
REF 15
W4E2
W2P1
A2J1
A2
POWER SUPPLY ASM
11 REF
13 REF
REF 14
W3
A2J2
W3P1
A2J1
SW1J1
AC LINE
NC
W2E1
W2P1
AC
NEUTRAL
SW1J4
W2E2
A2J2
A1J16
+V
+V
+V
GND
GND
GND
W3P1
W3P2

Quad Receiver Assembly 419525-001A and -002A*

Find Num	Item Number	Item Description	Qty
1	404525-001	LABEL BLANK 2 X 3/4	1
2	419522-001	COVER RECEIVER CASE	0
3	419523-001	ASSY RECEIVER CASE BOTTOM	0
4	422205-001	SHLD PC MOUNT RECEIVER	4
5	4502-410	SCREW PH 4-40 X 5/16,	4
6	2000540-001	SCR MACH PNHD M3X6LG SST W/THD LOCK	4
7	2003694-001	GASKET FOAM SHIELD	1
8	801308-001 *801308-002	PCB APEXPRO QUAD RCVR 560-614 MHZ PCB APEXPRO QUAD RCVR 420-474 MHZ	1
9	408230-017	LABEL FCC MARK CANADA	1

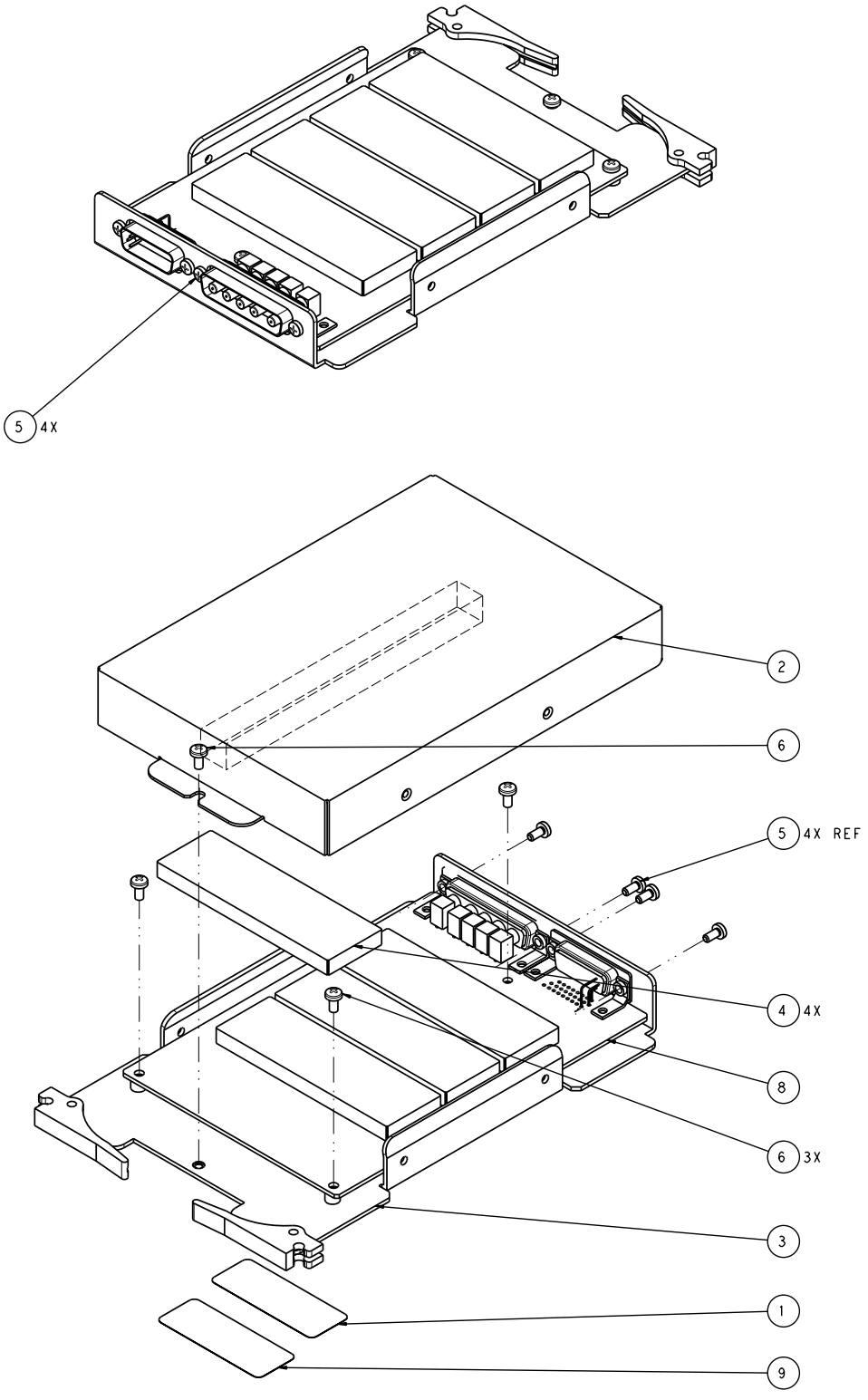
5 4X
2
6
5 4X REF
4 4X
8
6 3X
3
1
9

7 PCB Assemblies

For your notes

Receiver Subsystem SD801632-001C and -002B*

Item Description	Ref Des	Qty
CKT BD APEXPRO RCVR SUBSYS		1
RES SM CHIP 120 5% 1/8W	R27, R28, R75, R76, R85, R86, R87, R88, R89, R90	10
RES SM CHIP 82.5 1% 1/8W	R37, R39, R40, R41	4
CAP SM CER COG 330PF 1% 50V	C113	1
JACK RJ45 VERTICAL 8P PANEL ST	J6	1
HDR MTA-156 W/LOCKS VERT. 6P	J16	1
CONN COAX F TYPE VERT PG	J1, J2, J3, J4	4
TRANSISTOR RF SM NPN 5031	Q2	1
IC SM ACT 74ACT14	U54, U55	2
HEADER LP VERT 4WALL 10P PC MT	J5	1
IND SM CHIP 1008 180NH	L8	1
IND SM CHIP 1008 620NH 1%	L6	1
IND SM 1008 560NH	L7, L9	2
CONN RCPT D TYPE PC MT 9P W/ CLINCH NUTS	J15	1
CAP SM TANT 47UF 20% 10V	C112	1
INDUCTOR SM CHIP 10UH	L11	1
RES SM 0603 100 1% 1/16W	R97	1
RES SM CER 0603 1K 1% 1/16W	R16, R17, R34, R36, R49, R53, R54, R95, R96	9
RES SM CER 0603 10K 1% 1/16W	R4, R5, R6, R7, R9, R10, R11, R12, R13, R14, R15, R18, R20, R21, R24, R26, R29, R30, R31, R33, R35, R46, R47, R48, R50, R51, R55, R62, R74, R93, R94, R98, R99	33
RES SM CER 0603 24.3K 1% 1/16W	R60	1
RES SM CER 0603 0 OHM JUMPER	R32, R52, R56, R57, R58, R59, R63, R67	8
RES SM 0603 150 OHM 1%	R42	1
RES SM 0603 10 OHM 1% 1/16W	R3, R8, R64, R73	4
RES SM 0603 49.9 OHM 1% 1/16W	R65, R66	2
RES SM 0603 20.0K 1% 1/16W	R69	1
RES SM 0603 71.5 1% 1/16W	R45	1
RES SM 0603 332 OHM 1% 1/16W	R72	1

Item Description	Ref Des	Qty
RES SM 0603 121K 1% 1/16W	R2	1
RES SM 0603 30.1K 1%	R61	1
RES SM 0603 649K 1% 1/16W	R1	1
RES SM 0603 11.8 OHM 1% 1/16W	R68, R100	2
RES SM 0603 7.5K OHM 1%	R38	1
RES SM 0603 59K 1%,	R71	1
RES SM 0603 5.90K 1% 1/16W	R70	1
CAP SM X7R 0603 .1UF 10%	C10, C12, C16, C29, C36, C41, C42, C43, C45, C46, C53, C55, C56, C57, C59, C60, C61, C62, C65, C66, C67, C68, C69, C72, C78, C82, C84, C85, C86, C88, C103, C105, C108, C109, C110, C111, C115, C116, C117, C118, C119, C120, C126	43
CAP SM X7R 0603 1800PF 5%	C125	1
CAP SM X7R 0603 0.01UF 5% 50V	C20, C44, C58, C63, C64, C74, C75, C87, C89, C90, C114, C128, C129	13
CAP SM X7R 0603 .056UF 5% 16 V	C13, C21	2
CAP SM NPO 0603 100PF 5% 50V	C121, C122	2
CAP SM NPO 0603 22PF 5% 50V	C99	1
CAP SM NPO 0603 33PF 5% 50V	C94, C95	2
CAP SM NPO 0603 150PF 5%	C4, C5, C6, C7, C9, C30, C31, C32, C33, C35, C47, C48, C49, C50, C52, C70, C71, C73, C79, C81	20
CAP SM NPO 0603 4.7PF +/-.25PF	C96	1
CAP SM NPO 0603 5.6PF +/-25PF	C97	1
CAP SM C0G 0603 470PF 5% 50V	C91, C92, C100, C101, C102, C127	6
CAP SM NPO 0603 27PF 5% 50V	C98	1
CAP SM C0G 0603 220PF 5% 50V	C123	1
CAP SM COG 0603 120PF 5%	C104	1
CAP SM X7R 0805 .022 10% 50V	C124	1
DIODE DUAL SERIES BAV99 SOT323	CR2, CR3, CR4, CR7, CR8, CR9, CR10, CR11, CR12, CR14, CR17, CR18, CR19, CR20, CR21, CR22, CR23, CR24	18
CAP SM TANT 47UF 10% 16V	C3, C17	2
CAP SM CER X7R .47UF 10% 50V	C2, C19	2
CAP SM TANT 33OUF 20% 6.3V	C18	1

Item Description	Ref Des	Qty
CAP SM TANT 68UF 20% 20V	C1, C14, C15	3
SM FERRITE BEAD 0603 BLM11A601	FB1	1
RES NTWK 33 OHM O.O63W 50V	U15, U28, U40, U42	4
RES NTWK SM 10 OHM 0.063W 50V	U10	1
RES NTWK SM 1K OHM 0.063W 50V	U22, U23, U52, U53	4
RES NTWK SM 10K OHM 0.063W 50V	U27, U41, U43, U49, U50, U51	6
IC SM CMOS INV TC7SHUO4FU	U13, U38	2
RES SM 2512 100M 10% 2W 2.5KV	R101	1
XFMR SM TP ETHERNET FOR LXT905	T1	1
LED SM GREEN/YELLOW 1210 20MA	DS1, DS2, DS3, DS4, DS5, DS6, DS7	7
IC SM TP ETHERNET SIA LXT905LC	U47	1
IND SM CHIP 0603 120 NH 5%	L2, L3, L4, L5	4
IND SM CHIP 0603 100NH 5%	L10	1
DIODE SM VARACTOR SMV1204-37	CR16	1
IC SM RESET MAX809 SOT23 3.08V	U31	1
CONN RCPT D 26P ST PC MT	J11, J12, J13, J14	4
CONN D RCPT 5P ST 50 OHM COAX	J7, J8, J9, J10	4
IC SM 74LVC244	U24, U29, U44, U46	4
IC MEM SM FLASH APEXPRO BACKPLANE V1	U11	1
IC OSC SM 20.000M 100PPM	Y3	1
IC SM OSC 25.0000M 100PPM	Y2	1
IC SM LDO REG +3.3V 1A SOT-223	Q1	1
IC MPU MPC860DE 50 MHZ 357BGA	U30	1
SURGE PROT 3.0KV +/-15%	E1	1
DIODE SM TVS 15V 40W UNI/BI	CR5, CR6, CR13, CR15	4
INDUCTOR SM 47UH +1/-20% 0.9A	L1	1
SM SCHOTTKY MBRM140T3	CR1	1
XTAL SM TCXO 14.4MHZ	Y1	1
IC SM RF SPLTR 4:1 560-614MHZ	U3, U9, U21, U39	4
IC SM RF SPLITTER 85-90MHZ	U33	1
IC SM MAX3226E 16 SSOP TR	U25	1

Item Description	Ref Des	Qty
IC SM 74LCX138 3.3V TSSOP	U16	1
SHIELD CLIP SM .346 X .094	BK1, BK2, BK3, BK4, BK5, BK6, BK7, BK8, BK9, BK10, BK11, BK12	12
IC SM 74LVC245 TSSOP 20P	U45	1
IC SM AC 74AC08	U18	1
IC SM FREQ SYNTH LMX2352	U48	1
IC SM COMP HIGH SPEED MAX998	U35	1
IC SM DAC 8-BIT MAX550A	U34	1
IC SM REG NEG 12V/ADJ MAX765	U4	1
CAP SM 1206 X7R 1.0UF 10% 16V	C11, C37, C54, C77, C83	5
IC RGLTR SM LOW NOISE MAX8877 3.0V	U32	1
IC RGLTR SM LOW NOISE MAX8877 3.3V	U5, U8, U20, U37	4
FILTER ELEK SM BANDPASS FC=587MHZ	U1, U6, U14, U26	4
IC AMPL SM SILICON RFIC 3.0GHZ INA-34063	U2, U7, U19, U36	4
IC SDRAM 256MB 4M X 16BIT X 4 BANKS	U12, U17	2
CAP SM CER 1206 4.7UF 10V 10% LOW ESR	C8, C34, C51, C76, C80	5
RES SM 0603 95.3 1% 1/16W	R43, R44	2
CAP SM COG 6.0PF +/-.1PF 50V	C93	1

Component side

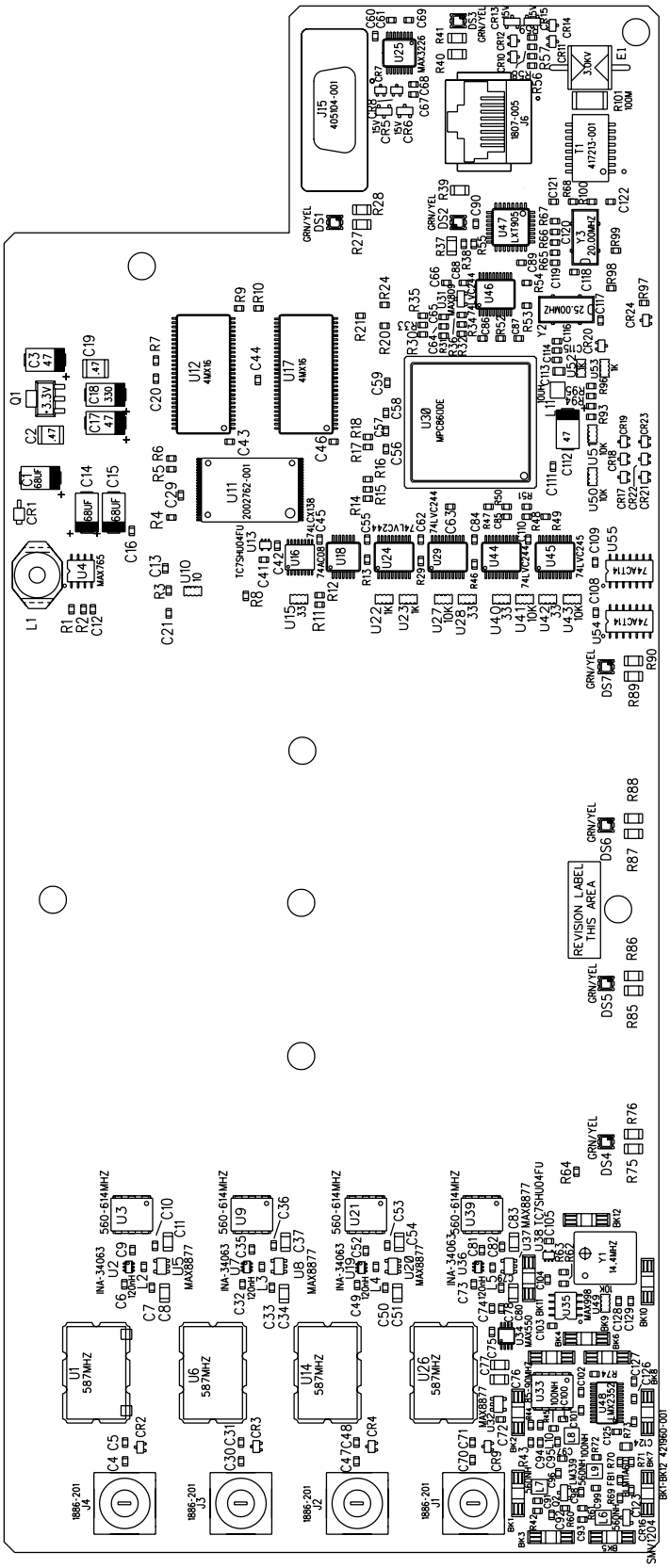

Solder side

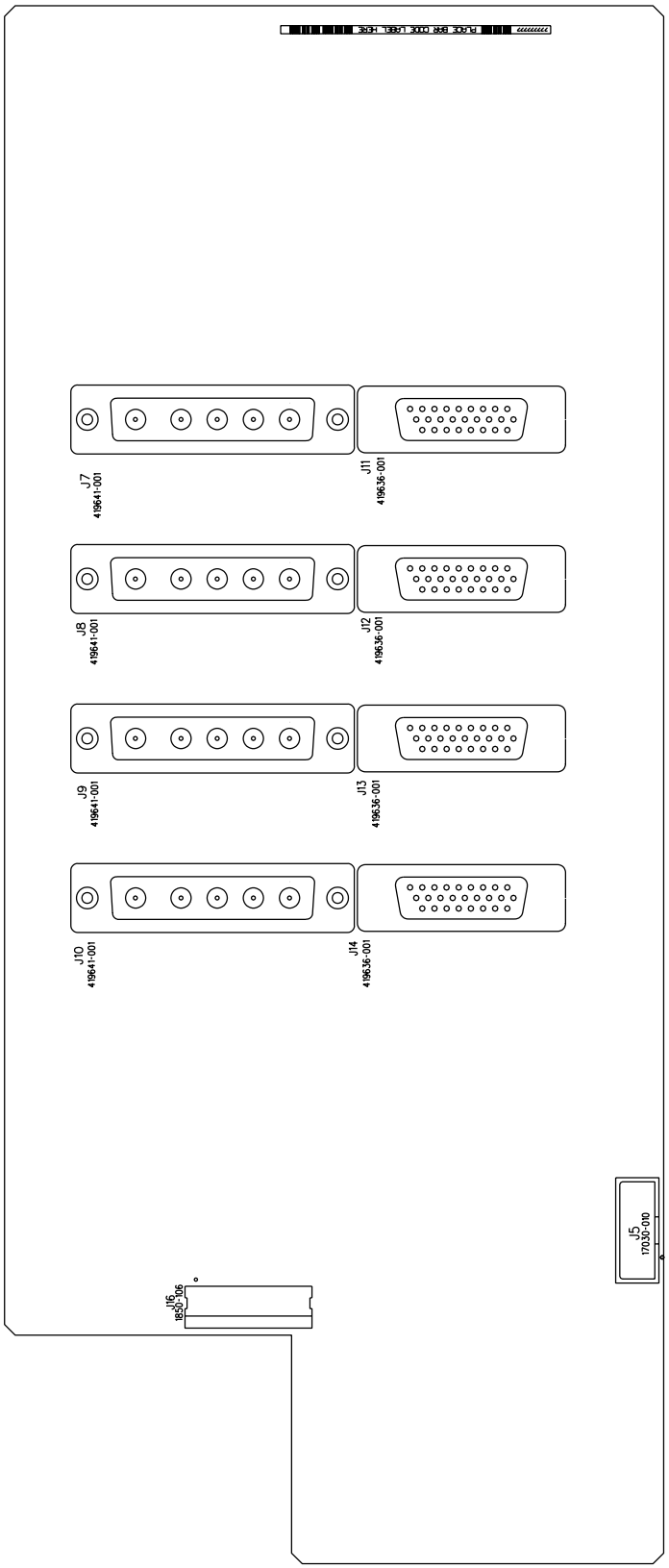
J7
419641-001
J11
419636-001
J8
419641-001
J12
419636-001
J9
419641-001
J13
419636-001
J10
419641-001
J14
419636-001
J5
170130-010
J15
185006

Sheet 1

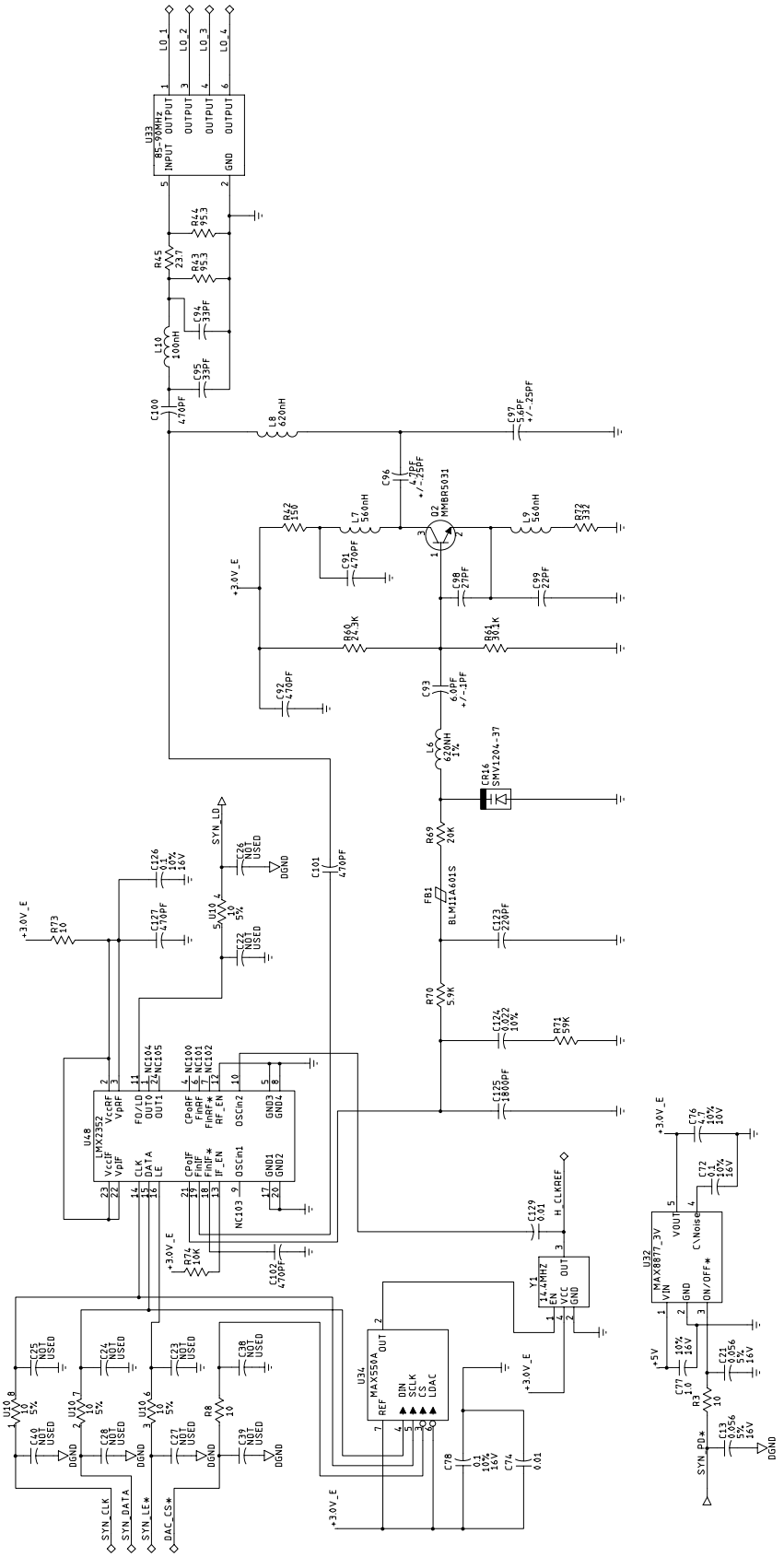

Sheet 2

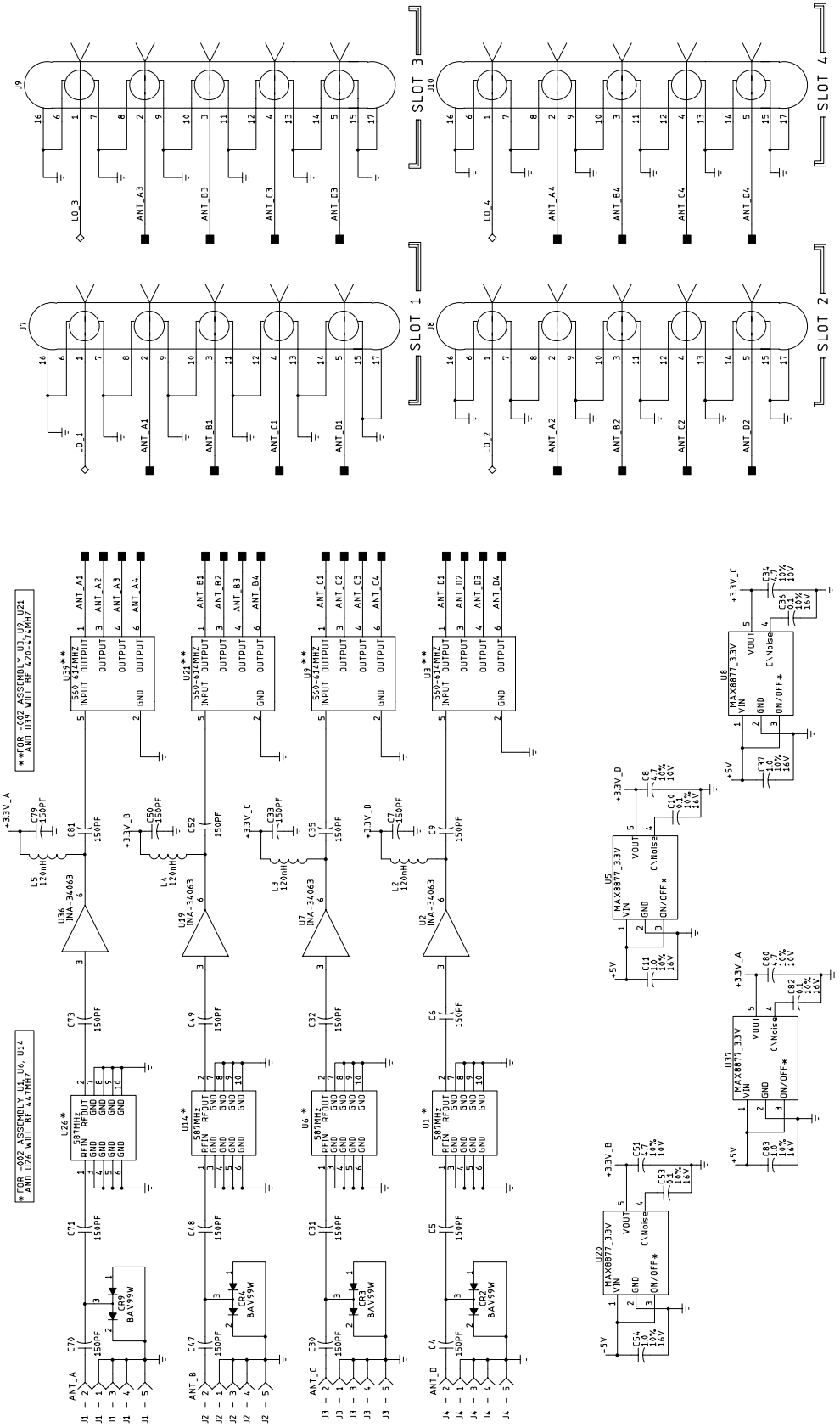
SLOT 1
SLOT 2
SLOT 3
SLOT 4
*FOR -002 ASSEMBLY U1, U6, U14 AND U26 WILL BE 447MHZ
**FOR -002 ASSEMBLY U3, U9, U21 AND U39 WILL BE 420-474MHZ

Sheet 3

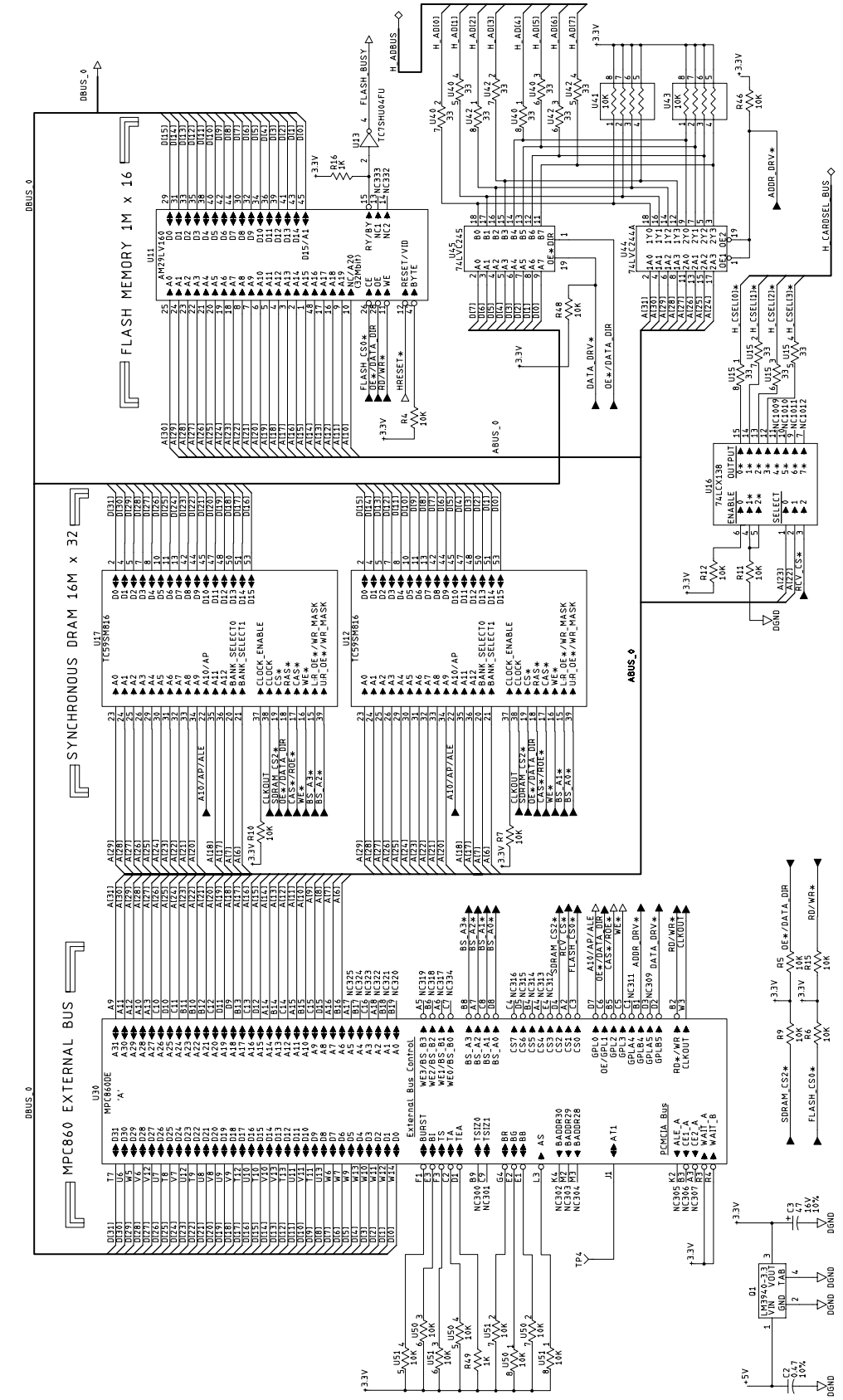
MPC860 EXTERNAL BUS
SYNCHRONOUS DRAM 16M x 32
FLASH MEMORY 1M x 16
ABUS_0
DBUS_0
H_ADBUS
H_CARDSEL_BUS
ADDR_DRV*
DATA_DRV*
OE*/DATA_DIR
RD/WR*
SDRAM_CS2*
FLASH_CS0*
HRESET*
FLASH_BUSY
RCV_CS*
H_CSEL01*
H_CSEL21*
H_CSEL31*
DGND
+3.3V
+5V

Sheet 4

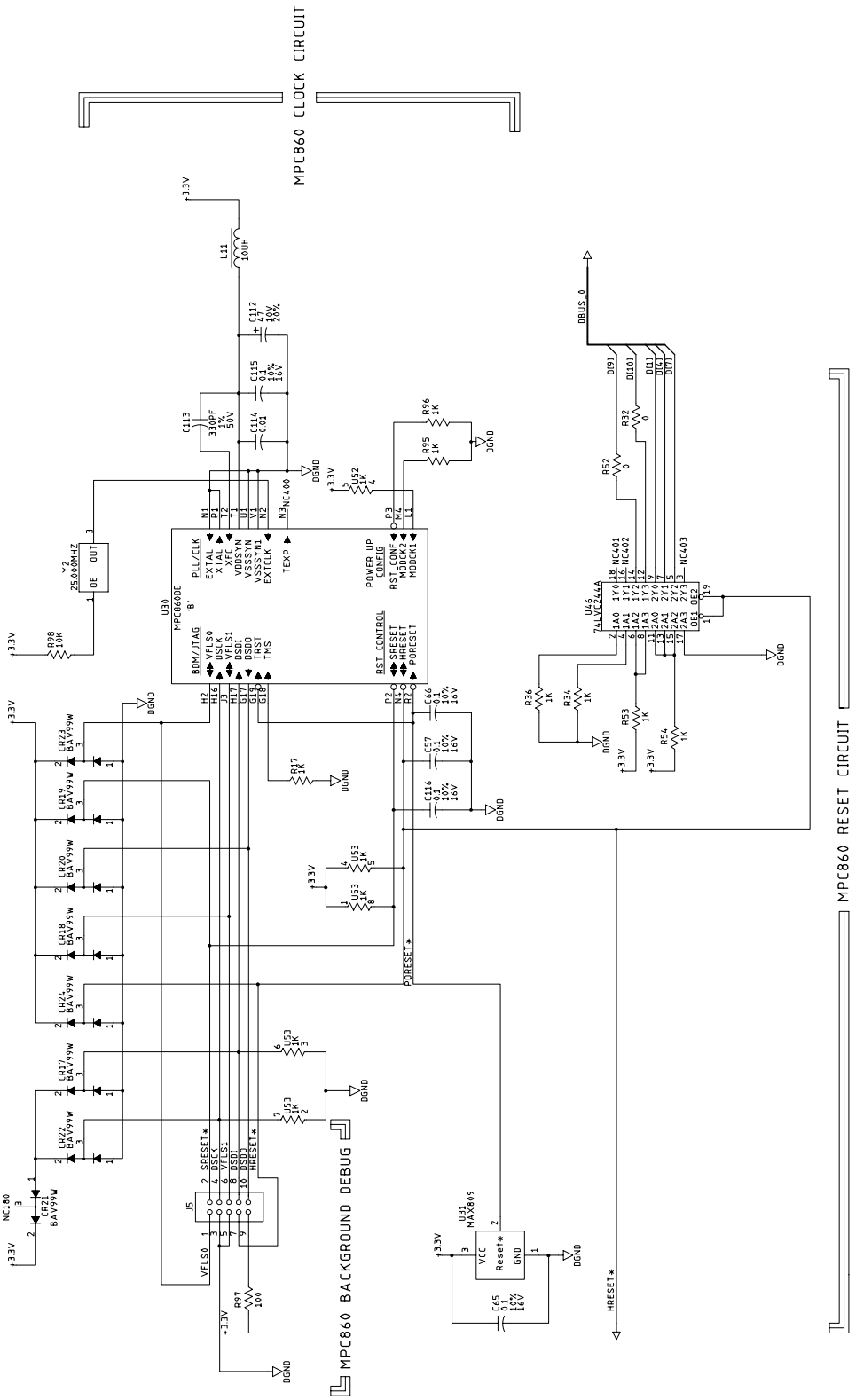
MPC860 CLOCK CIRCUIT
MPC860 RESET CIRCUIT
MPC860 BACKGROUND DEBUG
U30
MPC860DE
'B'
U46
74LVC244A
U31
MAX809
J5
Y2
25.000MHZ
L11
10UH
C112
47
10V
20%
C115
0.1
10%
16V
C113
330PF
1%
50V
C114
0.01
R96
1K
R95
1K
U52
1K
R98
10K
R17
1K
C66
0.1
10%
16V
C57
0.1
10%
16V
C116
0.1
10%
16V
U53
1K
R32
0
R52
0
R36
1K
R34
1K
R53
1K
R54
1K
C65
0.1
10%
16V
R97
100
CR23
BAV99W
CR19
BAV99W
CR20
BAV99W
CR18
BAV99W
CR24
BAV99W
CR17
BAV99W
CR22
BAV99W
CR21
BAV99W
NC180
NC400
NC401
NC402
NC403
DBUS_0
DGND
HRESET*
PORESET*
SRESET*
VFLS0
VCC
Reset*
GND

Sheet 5

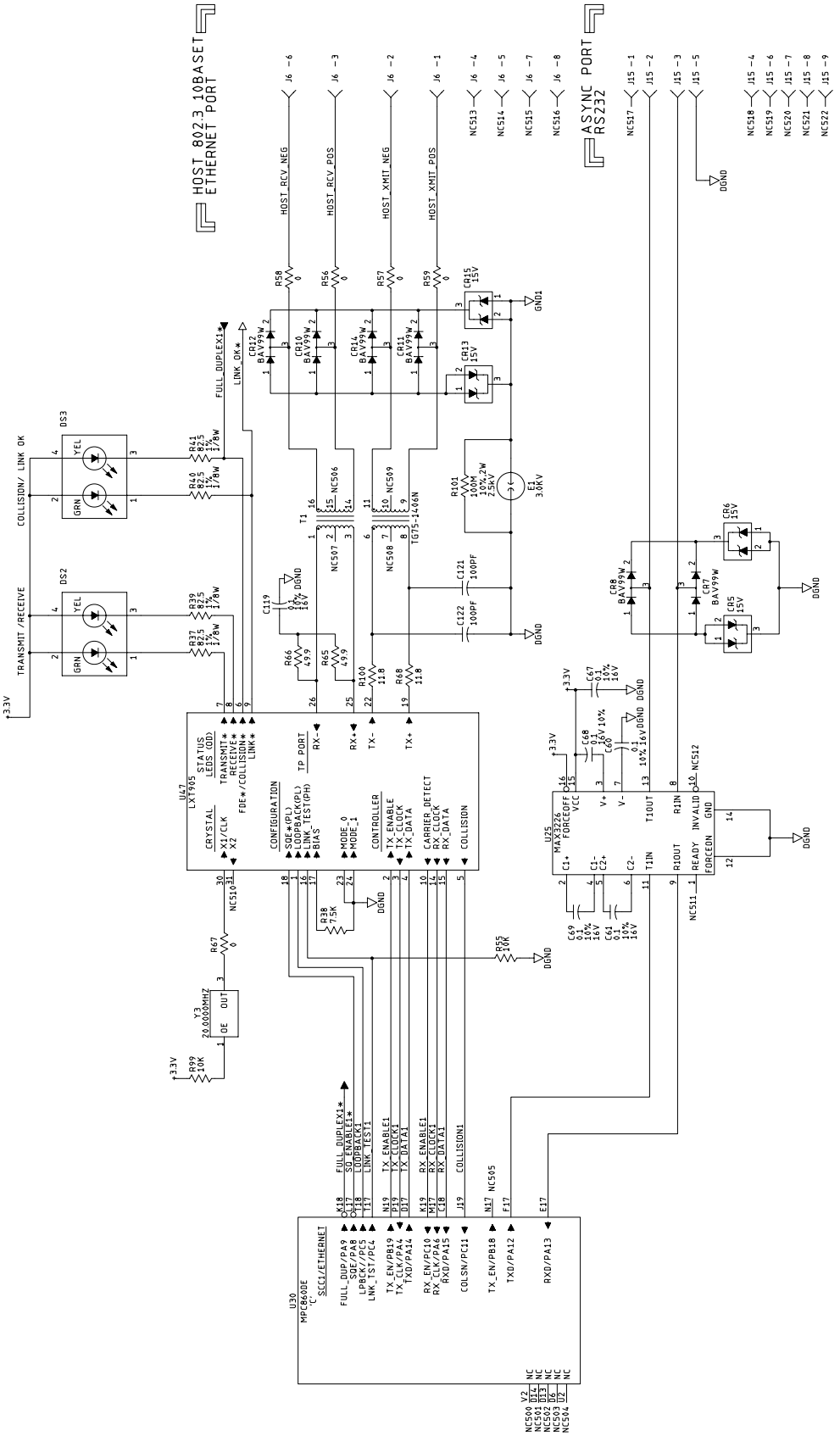
HOST 802.3 10BASET
ETHERNET PORT
ASYNC PORT
RS232
HOST_RCV_NEG
HOST_RCV_POS
HOST_XMIT_NEG
HOST_XMIT_POS
COLLISION/ LINK OK
TRANSMIT /RECEIVE
FULL_DUPLEX1*
LINK_OK*
U47
LXT905
U30
MPC860DE
U25
MAX3226
Y3
20.0000MHZ
T1
TG75-1406N
E1
3.0KV
DGND
+3.3V

Sheet 6

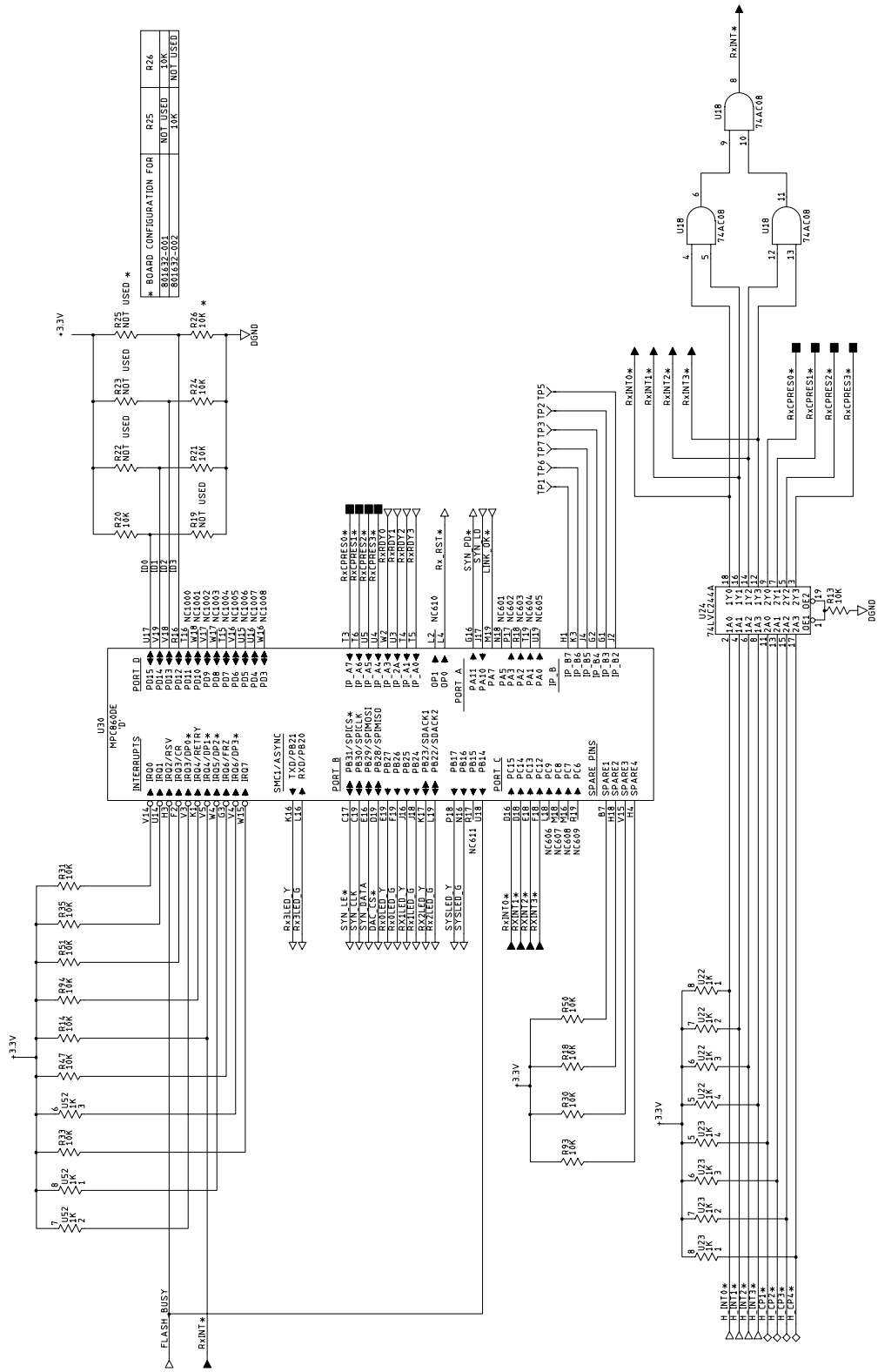
* BOARD CONFIGURATION FOR
801632-001
801632-002
R25 NOT USED
10K
R26 10K
NOT USED
+3.3V
DGND
U30
MPC860DE
PORT D
INTERRUPTS
SMC1/ASYNC
PORT B
PORT A
PORT C
SPARE PINS
U24
74LVC244A
U18
74AC08
RxINT*
RxINT0*
RxINT1*
RxINT2*
RxINT3*
RxCPRES0*
RxCPRES1*
RxCPRES2*
RxCPRES3*
SYN_PD*
SYN_LD
LINK_ON*
Rx_RST*
FLASH_BUSY
H_INT0*
H_INT1*
H_INT2*
H_INT3*
H_CP1*
H_CP2*
H_CP3*
H_CP4*

Sheet 7

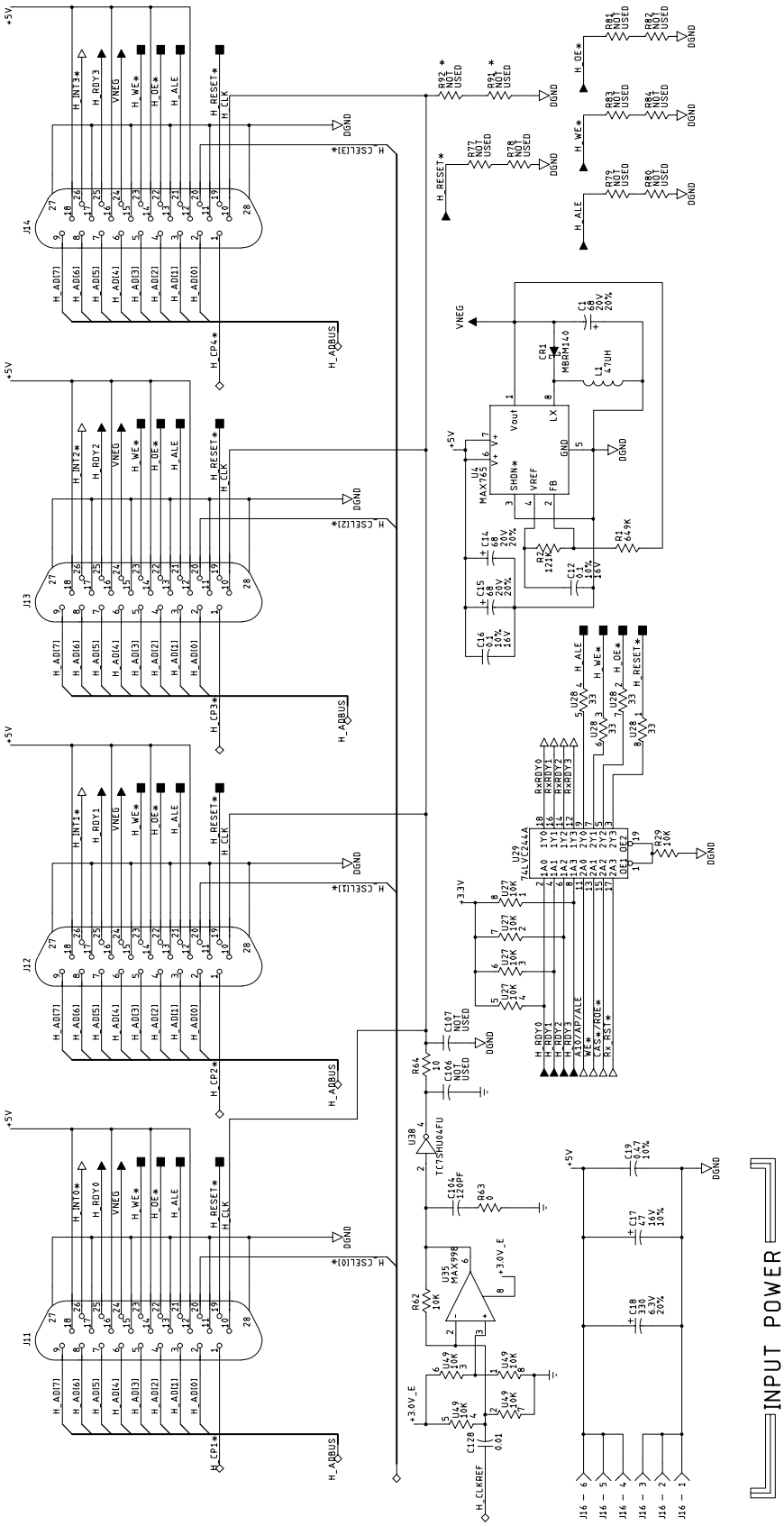
INPUT POWER
+5V
DGND
+3.3V
+3.0V_E
VNEG
H_ADBUS
H_CLKREF
H_CP1*
H_CP2*
H_CP3*
H_CP4*
H_CSEL(0)*
H_CSEL(1)*
H_CSEL(2)*
H_CSEL(3)*
H_CLK
H_RESET*
H_ALE
H_WE*
H_OE*
H_INT0*
H_INT1*
H_INT2*
H_INT3*
H_RDY0
H_RDY1
H_RDY2
H_RDY3
H_AD(7)
H_AD(6)
H_AD(5)
H_AD(4)
H_AD(3)
H_AD(2)
H_AD(1)
H_AD(0)
J11
J12
J13
J14
U4 MAX765
U35 MAX998
U38 TC7SHU04FU
U29 74LVC244A
U27 10K
U28 33
U49 10K
R1 649K
R2 121K
R44 10
R62 10K
R63 0
R29 10K
C1 68 20V 20%
C12 1.0 10% 16V
C14 68 20V 20%
C15 68 20V 20%
C16 0.1 10% 16V
C17 1.0 10% 16V
C18 330 4.3V 20%
C19 0.47 10%
C104 120PF
C106 NOT USED
C107 NOT USED
C128 0.01
CR1 MBRM140
L1 47UH
R72 NOT USED
R77 NOT USED
R78 NOT USED
R79 NOT USED
R80 NOT USED
R81 NOT USED
R82 NOT USED
R83 NOT USED
R84 NOT USED
R91 * NOT USED
R92 * NOT USED
J16 - 1
J16 - 2
J16 - 3
J16 - 4
J16 - 5
J16 - 6

Sheet 8

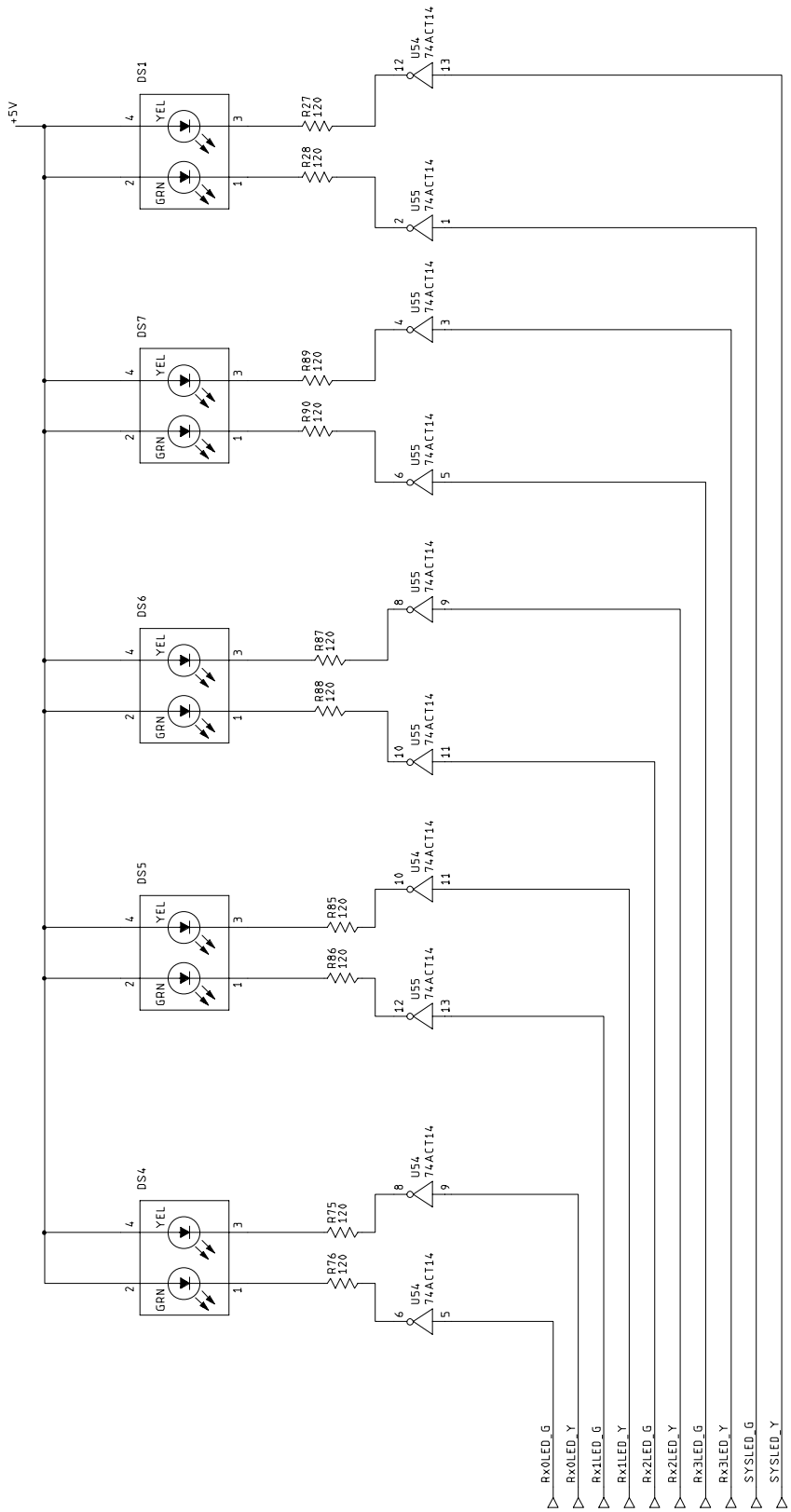
+5V
DS1
DS7
DS6
DS5
DS4
YEL
GRN
R27 120
R28 120
R89 120
R90 120
R87 120
R88 120
R85 120
R86 120
R75 120
R76 120
U54 74ACT14
U55 74ACT14
Rx0LED_G
Rx0LED_Y
Rx1LED_G
Rx1LED_Y
Rx2LED_G
Rx2LED_Y
Rx3LED_G
Rx3LED_Y
SYSLED_G
SYSLED_Y

Sheet 9

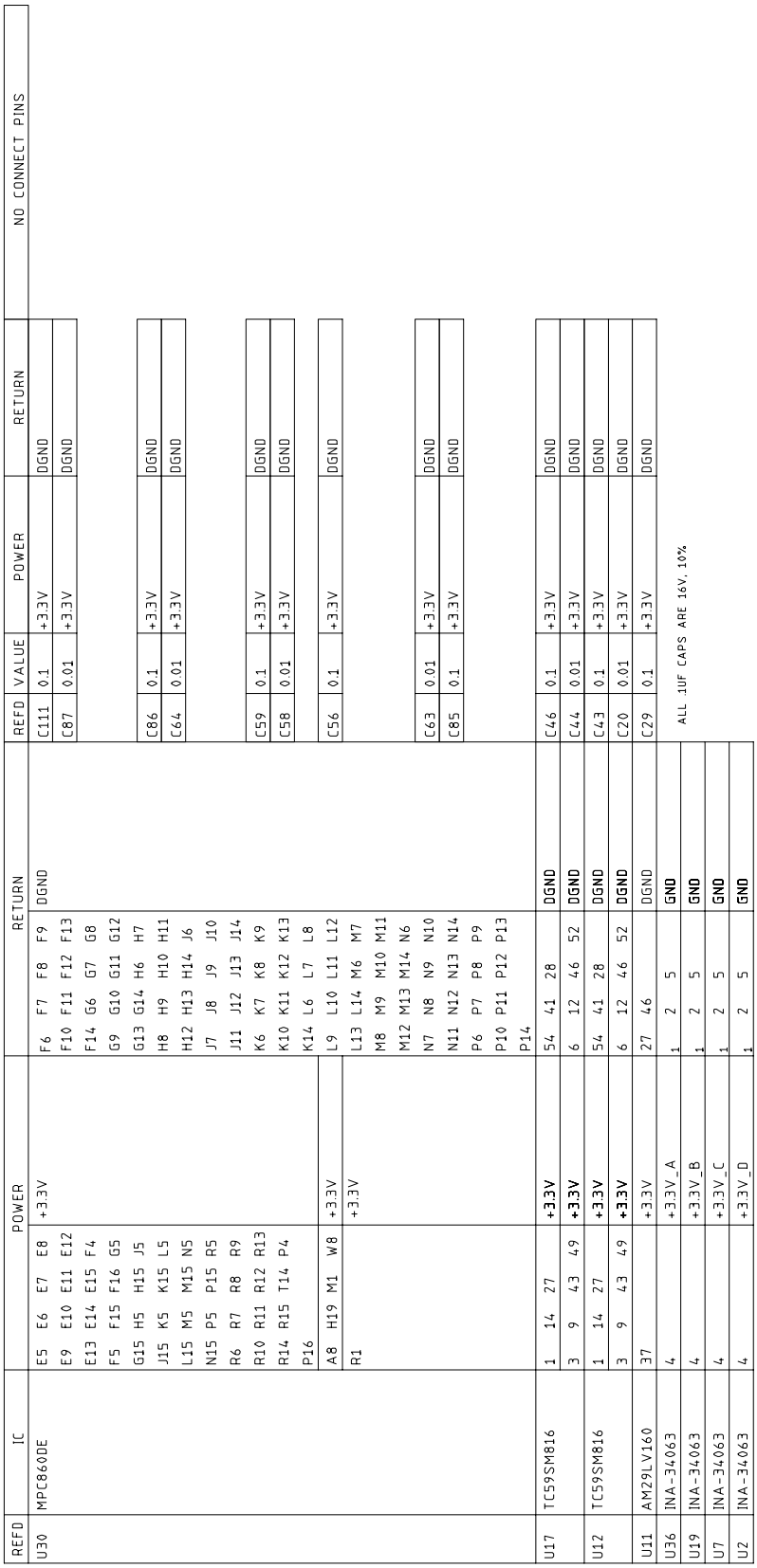

| REFD | IC | POWER | | | | | RETURN | | | | |

Sheet 10

REFD	IC		POWER		RETURN	REFD	VALUE	POWER	RETURN
U18	74AC08	14	+3.3V	7 DGND	C45	0.1	+3.3V	DGND	
U47	LX1905	13	+3.3V	11 12 DGND	C90	0.01	+3.3V	DGND	
		20	+3.3V	21 DGND	C120	0.1	+3.3V	DGND	
		27 28 29	+3.3V	32 DGND	C89	0.01	+3.3V	DGND	
U13	TC7SHU04FU	5	+3.3V	3 DGND	C41	0.1	+3.3V	DGND	1
U55	74ACT14	14	+5V	7 DGND	C109	0.1	+5V	DGND	
U54	74ACT14	14	+5V	7 DGND	C108	0.1	+5V	DGND	
U44	74LVC244A	20	+3.3V	10 DGND	C84	0.1	+3.3V	DGND	
U24	74LVC244A	20	+3.3V	10 DGND	C55	0.1	+3.3V	DGND	
U46	74LVC244A	20	+3.3V	10 DGND	C88	0.1	+3.3V	DGND	
U29	74LVC244A	20	+3.3V	10 DGND	C62	0.1	+3.3V	DGND	
U45	74LVC245	20	+3.3V	10 DGND	C110	0.1	+3.3V	DGND	
Y3	20.0000MHZ	4	+3.3V	2 DGND	C118	0.1	+3.3V	DGND	
U16	74LCX138	16	+3.3V	8 DGND	C42	0.1	+3.3V	DGND	
U35	MAX998	7	+3.0V_E	4 GND	C103	0.1	+3.0V_E	GND	1 5
Y2	25.000MHZ	4	+3.3V	2 DGND	C117	0.1	+3.3V	DGND	
U34	MAX550A	8	+3.0V_E	1 GND	C75	0.01	+3.0V_E	GND	
U38	TC7SHU04FU	5	+3.0V_E	3 GND	C105	0.1	+3.0V_E	GND	1

ALL .01UF CAPS ARE 50V,5%

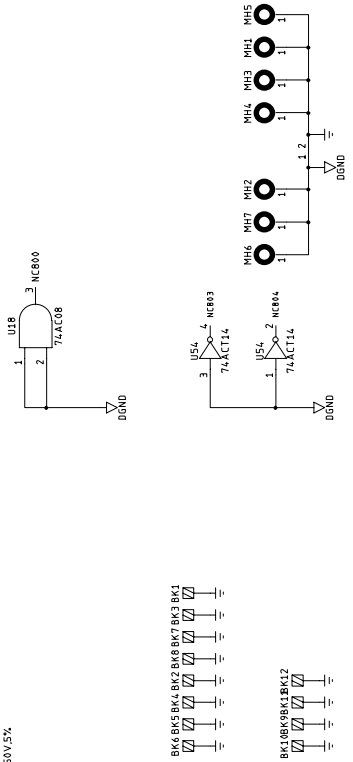

Quad Receiver SD801308-001C and -002C*

Item Description	Ref Des	Qty
CKT BD APEXPRO QUAD RCVR		1
INDUCTOR SM CHIP 330NH	L102, L103, L202, L203, L302, L303, L402, L403	8
INDUCTOR SM CHIP 2.2UH	L1	1
CAP SM TANT 47UF 20% 10V	C160, C260, C360, C460	4
IC REG SM -5V 79LO5	U110, U210, U310, U410	4
CAP SM TANT 1.0UF 10% 16V	C106, C109, C206, C209, C306, C309, C406, C409	8
INDUCTOR SM CHIP 10UH	L106, L206, L306, L406	4
RES SM 0603 52.3 1% 1/16W	R18	1
RES SM CER 0603 1K 1% 1/16W	R111, R211, R311, R411	4
RES SM 0603 4.75K 1% 1/16W	R146, R164, R165, R246, R264, R265, R346, R364, R365, R446, R464, R465	12
RES SM CER 0603 9.09K 1% 1/16W	R126, R226, R326, R426	4
RES SM CER 0603 10K 1% 1/16W	R12, R13, R14, R15, R16, R21, R23, R25, R27, R118, R131, R133, R134, R137, R138, R141, R142, R162, R163, R170, R172, R173, R174, R182, R218, R231, R233, R234, R237, R238, R241, R242, R262, R263, R270, R272, R273, R274, R282, R318, R331, R333, R334, R337, R338, R341, R342, R362, R363, R370, R372, R373, R374, R382, R418, R431, R433, R434, R437, R438, R441, R442, R462, R463, R470, R472, R473, R474, R482	69
RES SM CER 0603 4.42K 1% 1/16W	R112, R212, R312, R412	4
RES SM 0603 100K 1% 1/16W	R6, R7, R8, R9, R10, R11, R100, R128, R200, R228, R300, R328, R400, R428	14
RES SM CER 0603 0 OHM JUMPER	R171, R195, R271, R295, R371, R395, R471, R495	8
RES SM 0603 10 OHM 1% 1/16W	R117, R217, R317, R417	4
RES SM 0603 49.9 OHM 1% 1/16W	R1, R2, R3, R103, R123, R124, R127, R203, R223, R224, R227, R303, R323, R324, R327, R403, R423, R424, R427	19
RES SM 0603 3.83K 1% 1/16W	R179, R279, R379, R479	4
RES SM 0603 20.0K 1% 1/16W	R115, R116, R215, R216, R315, R316, R415, R416	8
RES SM 0603 115 1% 1/16	R19, R20	2

Item Description	Ref Des	Qty
RES SM 0603 200 OHM 1% 1/16W	R180, R280, R380, R480	4
RES SM 0603 1.50K 1% 1/16W	R109, R143, R144, R209, R243, R244, R309, R343, R344, R409, R443, R444	12
RES SM CER 0603 619 1% 1/16W	R125, R225, R325, R425	4
RES SM CER 0603 49.9K 1%	R129, R229, R329, R429	4
RES SM CER 0603 20.0 1% 1/16W	R29	1
RES SM 0603 2.49K 1% 1/16W	R132, R232, R332, R432	4
RES SM 0603 499 OHM 1%	R130, R230, R330, R430	4
RES SM 0603 383 OHM 1% 1/6W	R119, R120, R219, R220, R319, R320, R419, R420	8
RES SM 0603 1.33K 1% 1/16W	R108, R208, R308, R408	4
RES SM 0603 174 1% 1/16W	R107, R207, R307, R407	4
RES SM 0603 14.3K 1% 1/16W	R135, R136, R139, R140, R235, R236, R239, R240, R335, R336, R339, R340, R435, R436, R439, R440	16
CAP SM X7R 0603 .1UF 10%	C17, C18, C20, C21, C22, C23, C24, C25, C26, C36, C37, C38, C39, C40, C41, C42, C105, C107, C108, C112, C131, C133, C134, C145, C161, C163, C164, C166, C167, C168, C170, C171, C172, C173, C174, C175, C176, C177, C178, C179, C180, C181, C182, C183, C184, C185, C186, C187, C189, C193, C205, C207, C208, C212, C231, C233, C234, C245, C261, C263, C264, C266, C267, C268, C270, C271, C272, C273, C274, C275, C276, C277, C278, C279, C280, C281, C282, C283, C284, C285, C286, C287, C289, C293, C305, C307, C308, C312, C331, C333, C334, C345, C361, C363, C364, C366, C367, C368, C370, C371, C372, C373, C374, C375, C376, C377, C378, C379, C380, C381, C382, C383, C384, C385, C386, C387, C389, C393, C405, C407, C408, C412, C431, C433, C434, C445, C461, C463, C464, C466, C467, C468, C470, C471, C472, C473, C474, C475, C476, C477, C478, C479, C480, C481, C482, C483, C484, C485, C486, C487, C489, C493, C504, C604, C704, C804, C805, C806, C807, C808	160
CAP SM X7R 0603 1000PF 5% 50V	C115, C118, C119, C130, C132, C138, C215, C218, C219, C230, C232, C238, C315, C318, C319, C330, C332, C338, C415, C418, C419, C430, C432, C438	24
CAP SM X7R 0603 1800PF 5%	C135, C235, C335, C435	4

Item Description	Ref Des	Qty
CAP SM X7R 0603 0.01UF 5% 50V	C1, C2, C3, C114, C129, C137, C146, C162, C165, C169, C190, C214, C229, C237, C246, C262, C265, C269, C290, C314, C329, C337, C346, C362, C365, C369, C390, C414, C429, C437, C446, C462, C465, C469, C490	35
CAP SM X7R 0603 4700PF 5% 50V	C149, C249, C349, C449	4
CAP SM X7R 0603 220PF 5% 50V	C198, C298, C398, C498	4
CAP SM NPO 0603 12PF 5% 50V	C156, C256, C356, C456	4
CAP SM NPO 0603 22PF 5% 50V	C142, C242, C342, C442, C502, C602, C702, C802	8
CAP SM NPO 0603 33PF 5% 50V	C34, C35	2
CAP SM NPO 0603 150PF 5%	C4, C5, C6, C7, C8, C9, C10, C11, C12, C13, C14, C15, C101, C102, C103, C104, C110, C111, C117, C120, C121, C128, C143, C144, C150, C151, C152, C153, C154, C155, C201, C202, C203, C204, C210, C211, C217, C220, C221, C228, C243, C244, C250, C251, C252, C253, C254, C255, C301, C302, C303, C304, C310, C311, C317, C320, C321, C328, C343, C344, C350, C351, C352, C353, C354, C355, C401, C402, C403, C404, C410, C411, C417, C420, C421, C428, C443, C444, C450, C451, C452, C453, C454, C455	84
CAP SM NPO 0603 15PF 5% 50V	C49	1
CAP SM NPO 0603 470PF 5% 50V	C140, C141, C191, C240, C241, C291, C340, C341, C391, C440, C441, C491	12
CAP SM NPO 0603 9.1PF +/-.25PF	C157, C158, C257, C258, C357, C358, C457, C458	8
CAP SM X7R 0805 .15UF 5% 16V	C147, C247, C347, C447	4
SM FERRITE BEAD 0603 BLM11A601	FB1, FB100, FB200, FB300, FB400	5
CAP SM TANT 10UF 10V 10%	C192, C292, C392, C492	4
IND SM CHIP 0805 180NH 10	L100, L200, L300, L400	4
IND SM CHIP 0805 150NH 10	L101, L201, L301, L401	4
CAP SM X7R 1210 .68UF 10% 16V	C148, C248, C348, C448	4
RES NTWK SM 10K OHM 0.063W 50V	U170, U171, U172, U270, U271, U272, U370, U371, U372, U470, U471, U472	12
CAP SM TANT 100UF 10% 10V	C16, C19	2
IC SM CMOS INV TC7SHUO4FU	U18, U165, U166, U265, U266, U365, U366, U465, U466	9
IND SM CHIP 0603 120 NH 5%	L2, L3, L4, L5	4

Item Description	Ref Des	Qty
IND SM CHIP 0603 100NH 5%	L6, L104, L204, L304, L404	5
SM FILTER CERAMIC 455KHZ 15KHZ BW	Y100, Y200, Y300, Y400	4
IC SM RECEIVER IF AD607	U103, U203, U303, U403	4
IC SM DDS SYNTH. 48 PIN TQFP	U164, U264, U364, U464	4
MIXER SM ACTIVE MC13143	U106, U206, U306, U406	4
IC SM SSOP AD7729 3V/5V DU	U162, U262, U362, U462	4
CONN PLUG D 26P RA PC MT	J1	1
CONN D PLUG 5P RA 50 OHM COAX	J2	1
FILT SM QTZ SAW 86.85MHZ	U107, U207, U307, U407	4
IC SM SP4T RF HMC182S14	U101, U201, U301, U401	4
IC SM LDO REG +3.3V 1A SOT-223	U160, U260, U360, U460	4
RES SM ARRAY CER 51 OHM	R4, R5	2
SM 0603 TESTPOINT	TP103, TP160, TP161, TP162, TP203, TP260, TP261, TP262, TP303, TP360, TP361, TP362, TP403, TP460, TP461, TP462	16
IC SM RF SPLTR 4:1 560-614MHZ *IC SM RF SPLTR 4:1 420-474MHZ	U7, U8, U9, U10	4
IC SM RF SPLITTER 85-90MHZ	U6	1
SHIELD CLIP SM .346 X .094	BK100, BK101, BK102, BK103, BK104, BK105, BK106, BK107, BK108, BK109, BK110, BK111, BK200, BK201, BK202, BK203, BK204, BK205, BK206, BK207, BK208, BK209, BK210, BK211, BK300, BK301, BK302, BK303, BK304, BK305, BK306, BK307, BK308, BK309, BK310, BK311, BK400, BK401, BK402, BK403, BK404, BK405, BK406, BK407, BK408, BK409, BK410, BK411	48
IC SM FREQ SYNTH LMX2352	U104, U204, U304, U404	4
IC PRCSR SM TMS320VC549 144TQFP 100MHZ	U161, U261, U361, U461	4
IC SM MAX969 16 PIN QSOP	U109, U209, U309, U409	4
IC SM VCO 473-528 MHZ *IC SM VCO 506-561 MHZ	U105, U205, U305, U405	4
IC SM DIG ATTEN DC-1GHZ	U102, U202, U302, U402	4
IC SM LDO REG 2.5V 180MA MIC5207	U167, U267, U367, U467	4
CAP SM 1206 X7R 1.0UF 10%	C43, C44, C45, C46, C47, C48, C136, C139, C188, C194, C236, C239, C288, C294, C336, C339, C388, C394, C436, C439, C488, C494, C501, C503, C601, C603, C701, C703, C801, C803	30

Item Description	Ref Des	Qty
IC EPLD SM APEXPRO QUAD RX MOD RCVR V1	U163, U263, U363, U463	4
IC RGLTR SM LOW NOISE MAX8877 3.3V	U12, U13, U14, U15, U16, U17, U100, U108, U200, U208, U300, U308, U400, U408	14
IC AMPL SM SILICON RFIC 3.0GHZ INA-34063	U1, U2, U3, U4, U5	5
CAP SM CER 1206 4.7UF 10V 10% LOW ESR	C28, C29, C30, C31, C32, C33, C809, C810, C811, C812, C813, C814, C815, C816	14
IC EPLD SM APEXPRO QUAD RX MOD CARD V1 *IC EPLD SM APEXPRO QUAD RX MOD CARD V2	U11	1
RES SM 0603 178 1% 1/16W	R122, R188, R194, R222, R288, R294, R322, R388, R394, R422, R488, R494	12
RES SM 0603 30.1 1% 1/16W	R186, R286, R386, R486	4

Component side

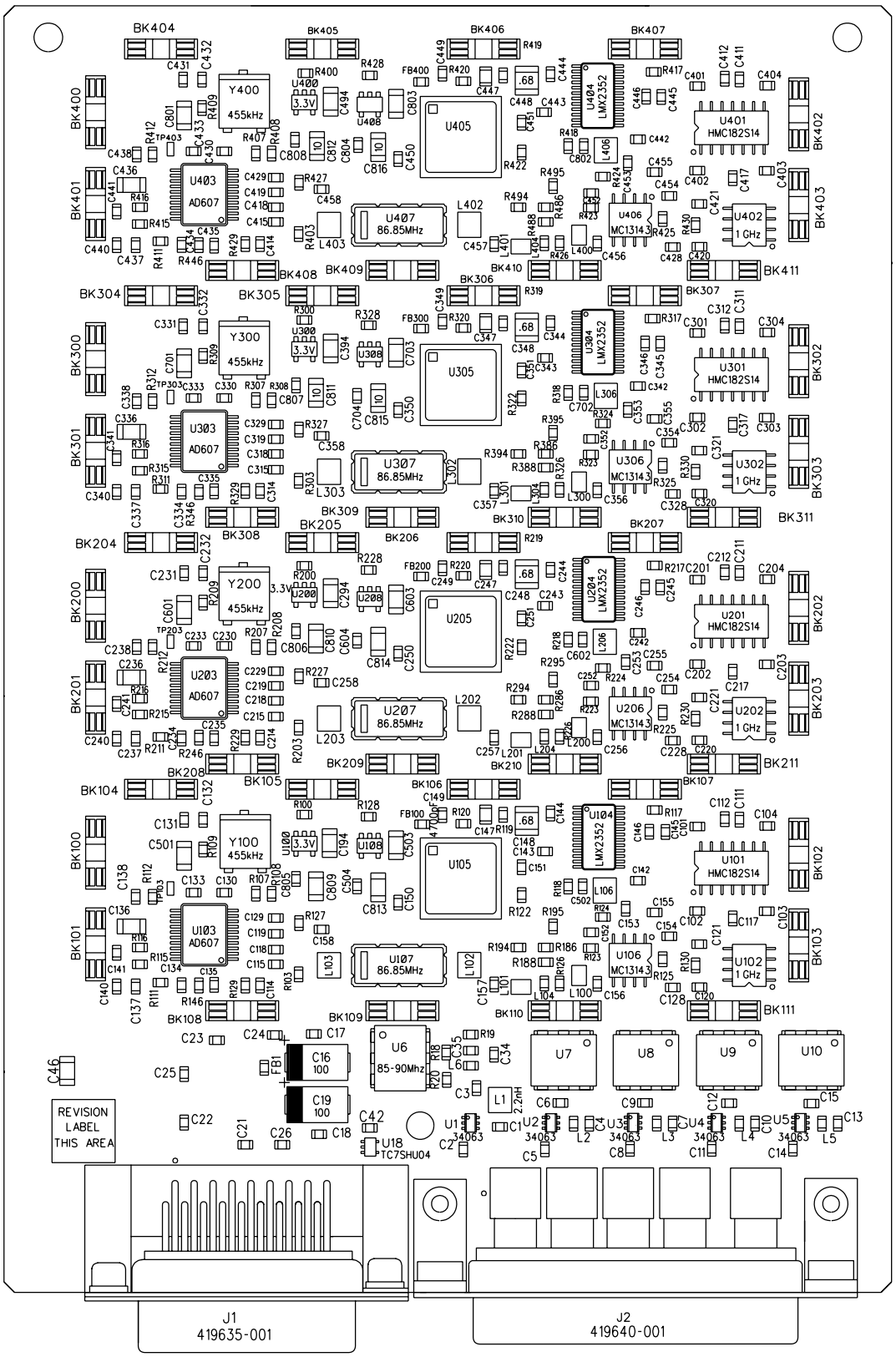

Solder side

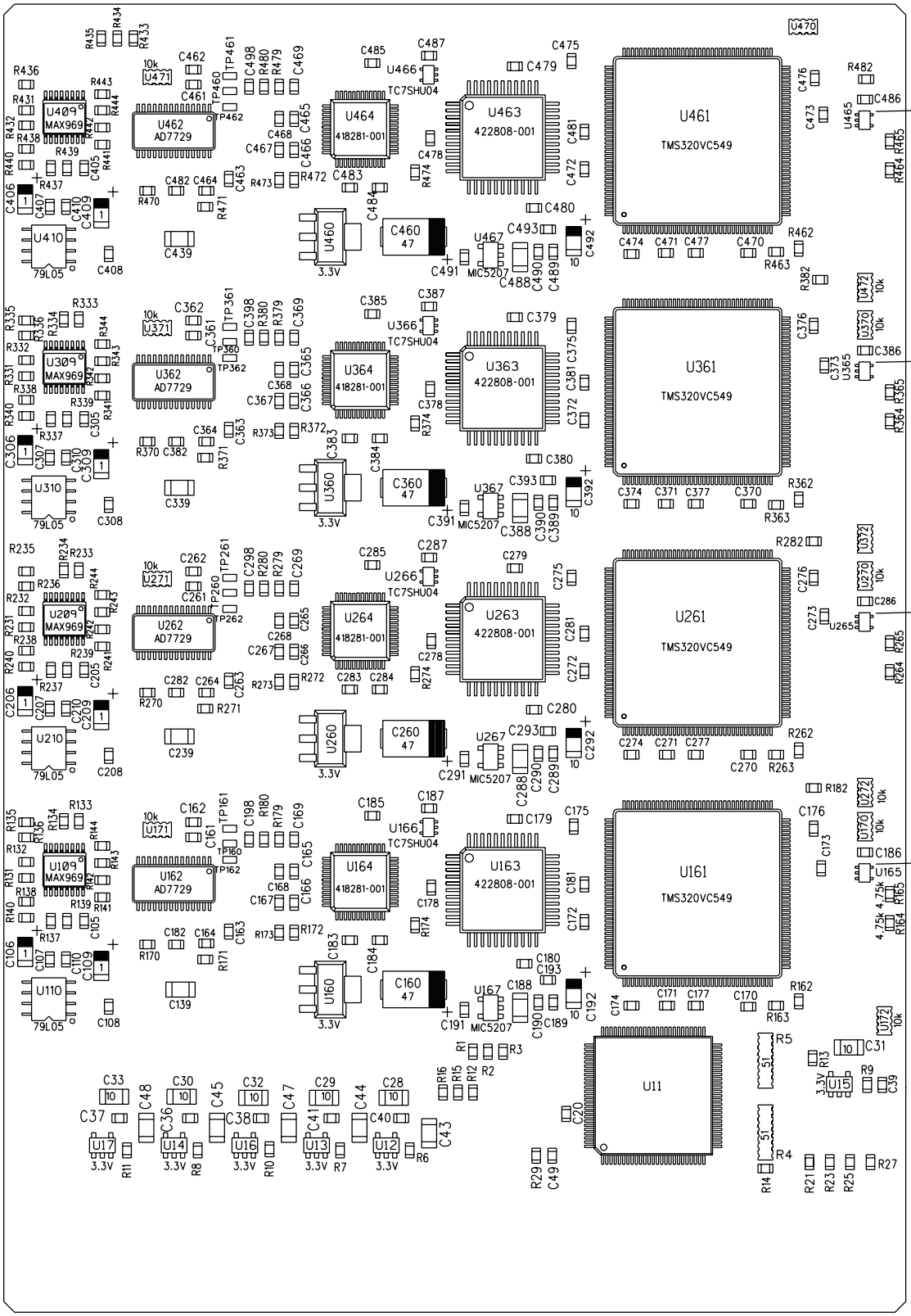
U461
TMS320VC549
U462
AD7729
U463
422808-001
U464
418281-001
U409
MAX969
U410
79L05
U460
3.3V
U361
TMS320VC549
U362
AD7729
U363
422808-001
U364
418281-001
U309
MAX969
U310
79L05
U360
3.3V
U261
TMS320VC549
U262
AD7729
U263
422808-001
U264
418281-001
U209
MAX969
U210
79L05
U260
3.3V
U161
TMS320VC549
U162
AD7729
U163
422808-001
U164
418281-001
U109
MAX969
U110
79L05
U160
3.3V
U11
TC7SHU04
MIC5207

Sheet 1

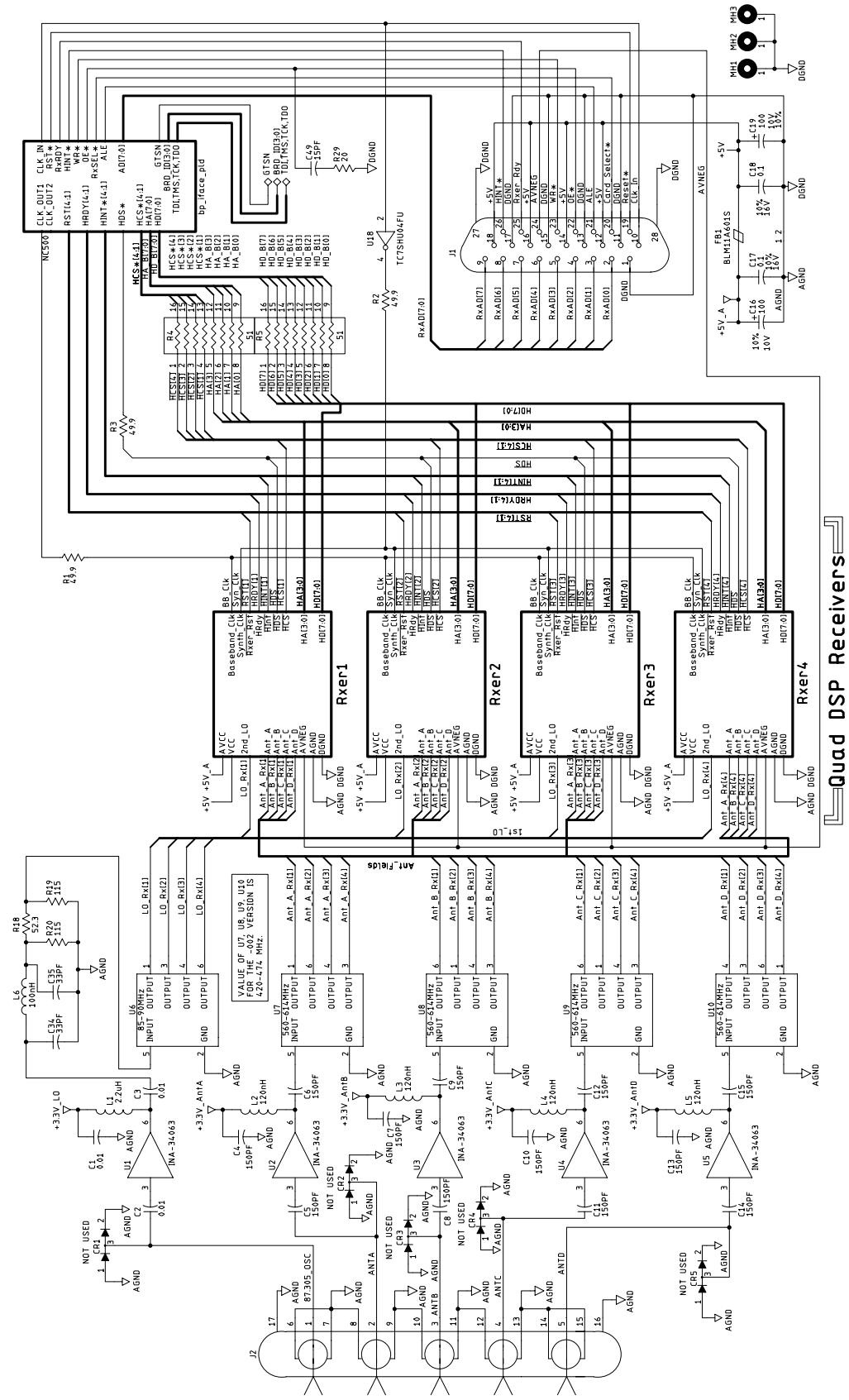
Quad DSP Receivers
Rxer1
Rxer2
Rxer3
Rxer4
bp_iface_pld
Baseband_Clk
Synth_Clk
Rxer_Rst
HRdy
HINT
HDS
HCS
HA[3:0]
HD[7:0]
RST[4:1]
HRDY[4:1]
HINT[4:1]
HCS[4:1]
HA[3:0]
HD[7:0]
AVCC
VCC
2nd_LO
Ant_A
Ant_B
Ant_C
Ant_D
AVNEG
AGND
DGND
1st_LO
Ant_Fields
VALUE OF U7, U8, U9, U10 FOR THE -002 VERSION IS 420-474 MHz.
85-90MHz
560-614MHz
INPUT
OUTPUT
GND
INA-34063
NOT USED
87.305_OSC
ANTA
ANTB
ANTC
ANTD
J1
J2
U18
TC7SHU04FU
FB1
BLM11A601S
MH1
MH2
MH3

Sheet 2

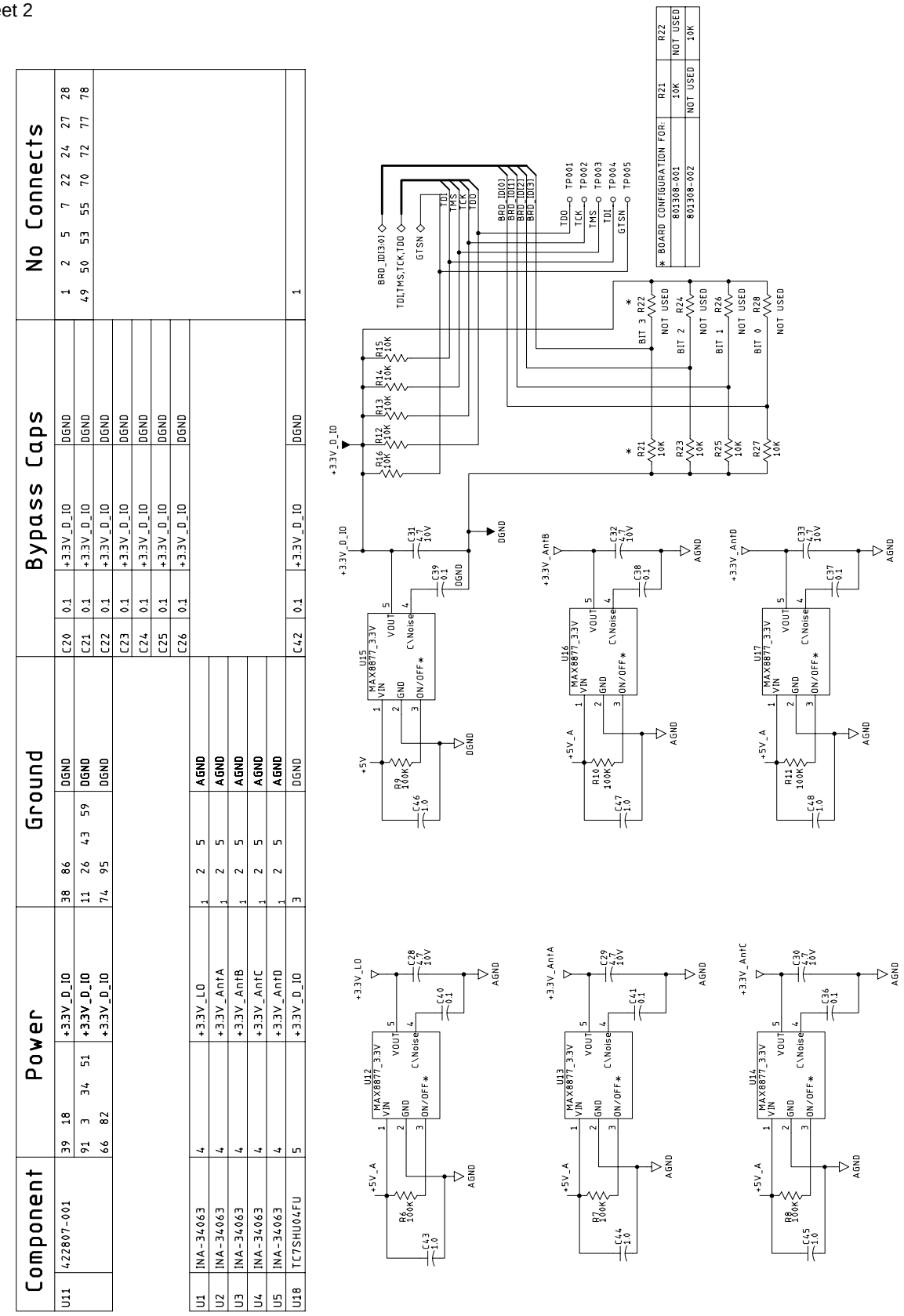
Component
Power
Ground
Bypass Caps
No Connects
U11 422807-001
39 18 +3.3V_D_IO 38 86 DGND C20 0.1 +3.3V_D_IO DGND 1 2 5 7 22 24 27 28
91 3 34 51 +3.3V_D_IO 11 26 43 59 DGND C21 0.1 +3.3V_D_IO DGND 49 50 53 55 70 72 77 78
66 82 +3.3V_D_IO 74 95 DGND C22 0.1 +3.3V_D_IO DGND
C23 0.1 +3.3V_D_IO DGND
C24 0.1 +3.3V_D_IO DGND
C25 0.1 +3.3V_D_IO DGND
C26 0.1 +3.3V_D_IO DGND
U1 INA-34063 4 +3.3V_LO 1 2 5 AGND
U2 INA-34063 4 +3.3V_AntA 1 2 5 AGND
U3 INA-34063 4 +3.3V_AntB 1 2 5 AGND
U4 INA-34063 4 +3.3V_AntC 1 2 5 AGND
U5 INA-34063 4 +3.3V_AntD 1 2 5 AGND
U18 TC7SHU04FU 5 +3.3V_D_IO 3 DGND C42 0.1 +3.3V_D_IO DGND 1
* BOARD CONFIGURATION FOR: R21 R22
801308-001 10K NOT USED
801308-002 NOT USED 10K
BRD_ID[3:0]
TDI,TMS,TCK,TDO
GTSN
TDO TP001
TCK TP002
TMS TP003
TDI TP004
GTSN TP005
BIT 3 R22 NOT USED
BIT 2 R24 NOT USED
BIT 1 R26 NOT USED
BIT 0 R28 NOT USED
R21 10K
R23 10K
R25 10K
R27 10K
R16 10K
R12 10K
R13 10K
R14 10K
R15 10K
+3.3V_D_IO
DGND
U15 MAX8877_3.3V
U16 MAX8877_3.3V
U17 MAX8877_3.3V
U12 MAX8877_3.3V
U13 MAX8877_3.3V
U14 MAX8877_3.3V
VIN VOUT GND C\Noise ON/OFF*
+5V
+5V_A
+3.3V_LO
+3.3V_AntA
+3.3V_AntB
+3.3V_AntC
+3.3V_AntD
AGND
R8 100K
R10 100K
R11 100K
R6 100K
R7 100K
R8 100K
C46 1.0
C47 1.0
C48 1.0
C43 1.0
C44 1.0
C45 1.0
C31 4.7 10V
C32 4.7 10V
C33 4.7 10V
C28 4.7 10V
C29 4.7 10V
C30 4.7 10V
C39 0.1
C38 0.1
C37 0.1
C40 0.1
C41 0.1
C36 0.1
Input Amplifier Regulators

Sheet 3

For the -002 version, U11 is 422807-002.

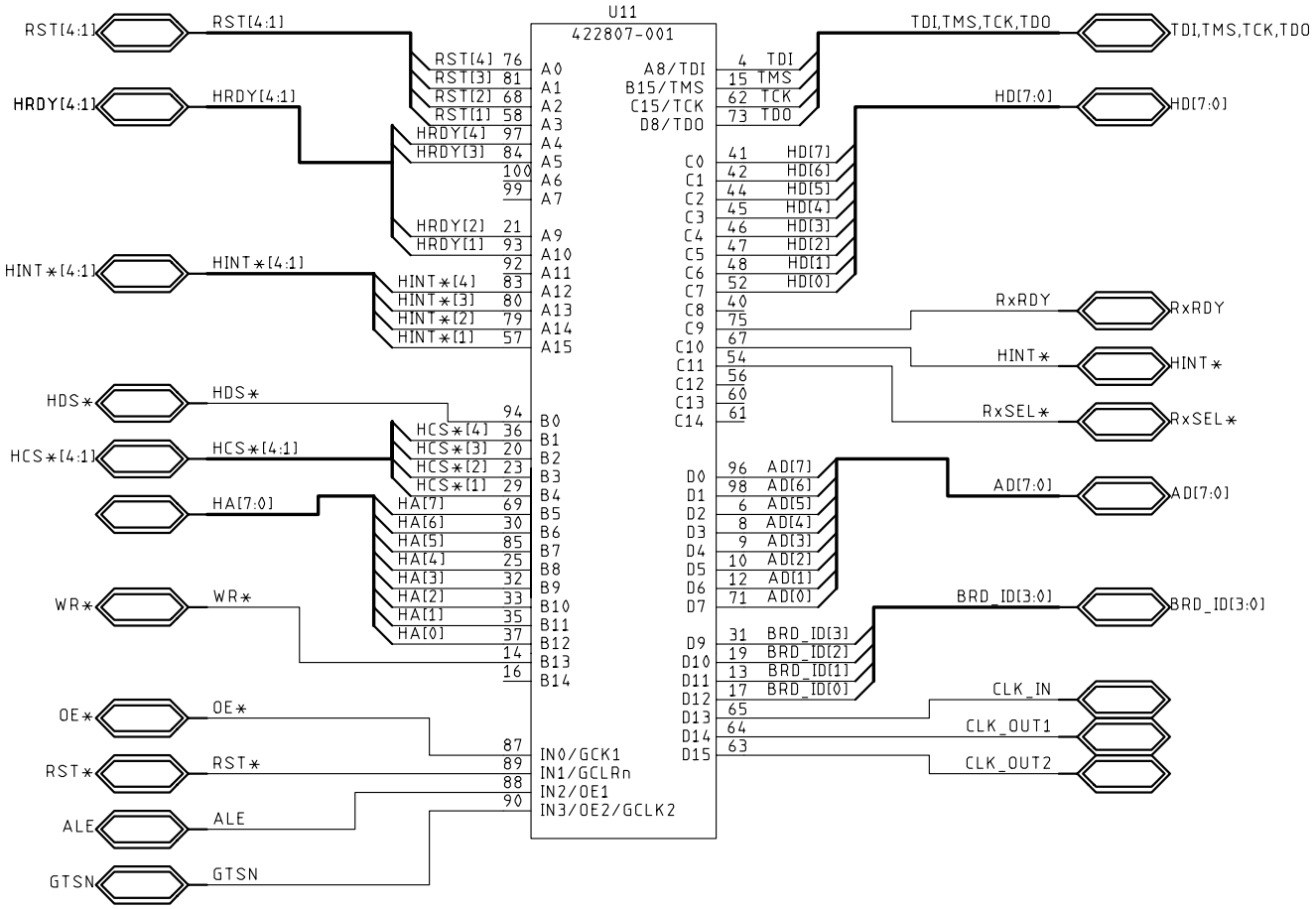

Sheet 4

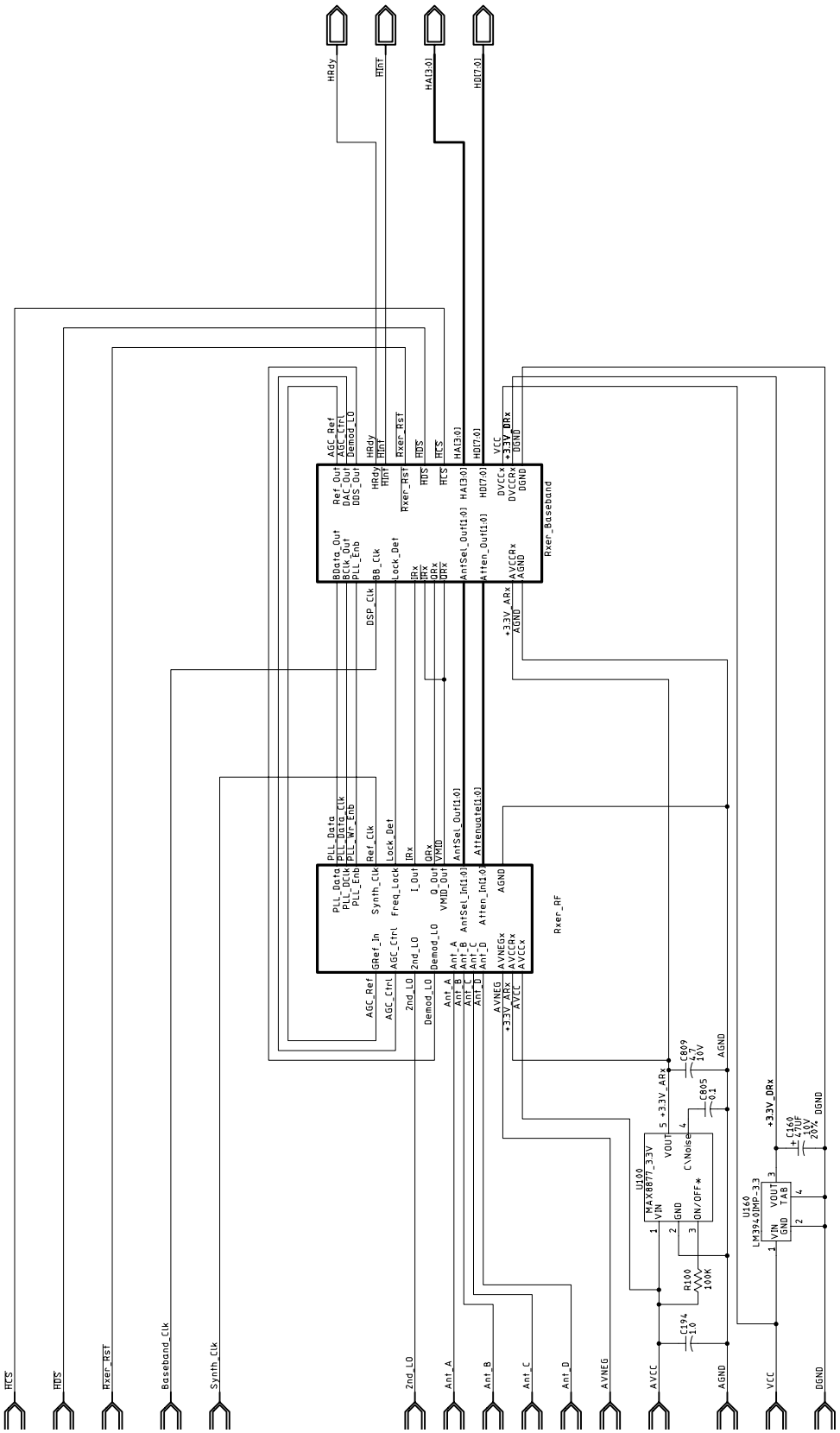
HRdy
HInt
HA[3:0]
HD[7:0]
HCS
HDS
Rxer_Rst
Baseband_Clk
Synth_Clk
2nd_LO
Ant_A
Ant_B
Ant_C
Ant_D
AVNEG
AVCC
AGND
VCC
DGND
Rxer_Baseband
Rxer_RF
+3.3V_DRx
+3.3V_ARx
U100
MAX8877_3.3V
U160
LM3940IMP_3.3
R100
100K
C194
1.0
C809
1.0
10V
C805
0.1
C160
47UF
10V
20%

Sheet 5

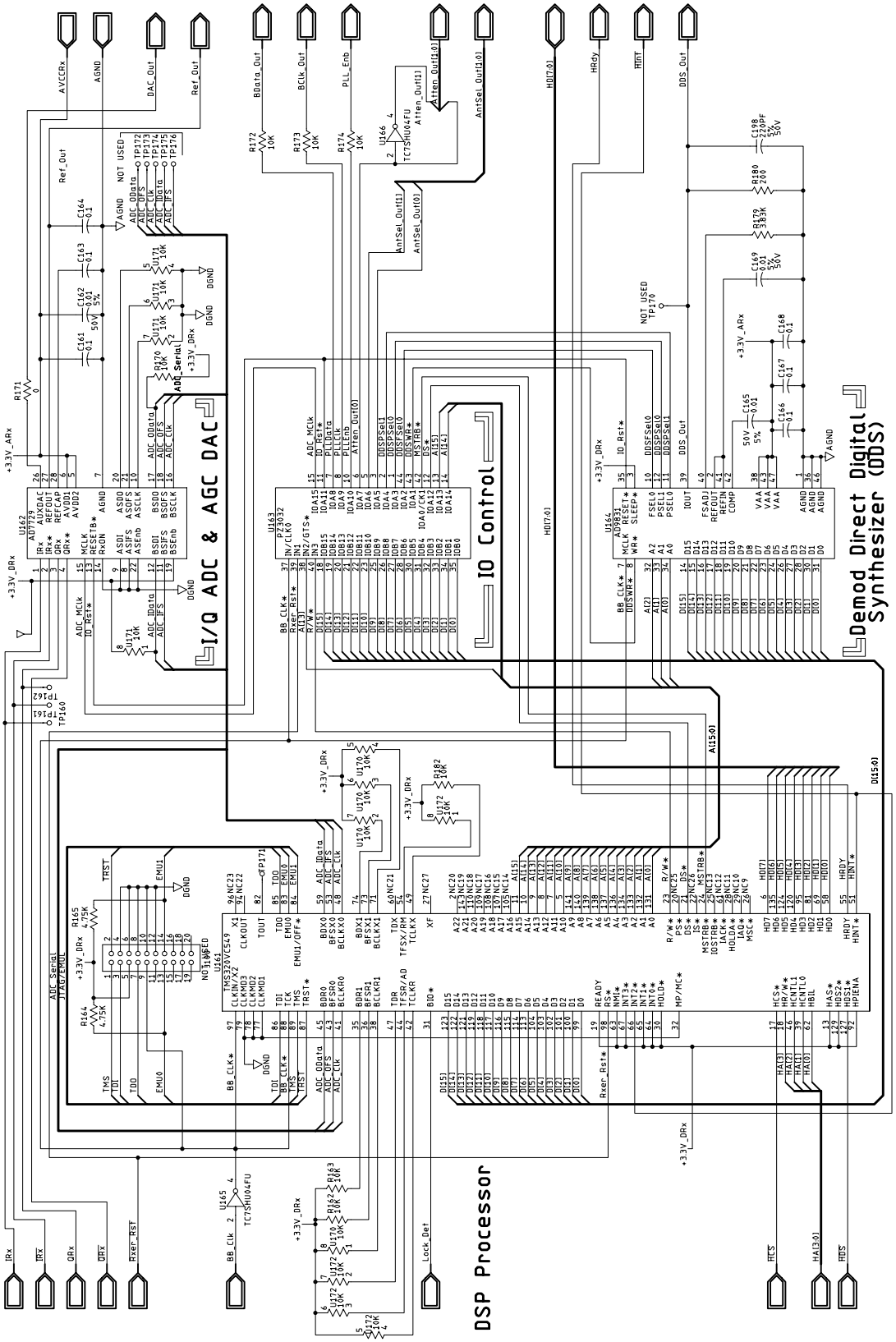
I/Q ADC & AGC DAC
IO Control
Demod Direct Digital Synthesizer (DDS)
DSP Processor
ADC_Serial
JTAG/EMU
AVCCRx
AGND
DAC_Out
Ref_Out
BData_Out
BClk_Out
PLL_Enb
Atten_Out[1:0]
AntSel_Out[1:0]
AntSel_Out[4:0]
HDT[7:0]
HRdy
HNT
DDS_Out
IRx
IRx
QRx
QRx
Rxer_Rst
Lock_Det
HCS
HA[3:0]
HDS

Sheet 6

Component		Power		Ground		Bypass Caps				No Connects
U161	TMS320VC549			1 3 14 15		C170	0.1	+3.3V_DRx	DGND	80
		4 33 56 75		34 37 40 50		C171	0.1	VCOREx	DGND	
		112 130	**+3.3V_DRx**	57 70 72 76		C172	0.1	+3.3V_DRx	DGND	
		12 16 52 68		90 93 106 111		C173	0.1	+3.3V_DRx	DGND	
		91 125 142	**VCOREx**	126 128 144	**DGND**	C174	0.1	+3.3V_DRx	DGND	
						C175	0.1	+3.3V_DRx	DGND	
						C176	0.1	VCOREx	DGND	
						C177	0.1	+3.3V_DRx	DGND	
U163	PZ3032	9	+3.3V_DRx	4	DGND	C178	0.1	+3.3V_DRx	DGND	
		17	+3.3V_DRx	16	DGND	C179	0.1	+3.3V_DRx	DGND	
		29	+3.3V_DRx	24	DGND	C180	0.1	+3.3V_DRx	DGND	
		41	+3.3V_DRx	36	DGND	C181	0.1	+3.3V_DRx	DGND	
U162	AD7729	24 25	+3.3V_DRx	23	DGND	C182	0.1	+3.3V_DRx	DGND	
U164	AD9831	4 5	+3.3V_DRx	6	DGND	C183	0.1	+3.3V_DRx	DGND	
		9		13		C184	0.1	+3.3V_DRx	DGND	
		25		29		C185	0.1	+3.3V_DRx	DGND	
U165	TC7SHU04FU	5	+3.3V_DRx	3	DGND	C186	0.1	+3.3V_DRx	DGND	1
U166	TC7SHU04FU	5	+3.3V_DRx	3	DGND	C187	0.1	+3.3V_DRx	DGND	1

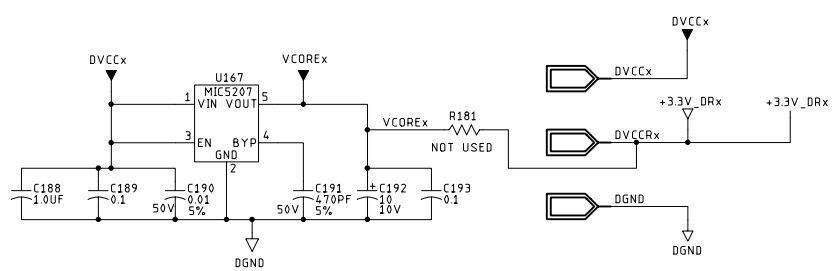

Sheet 7

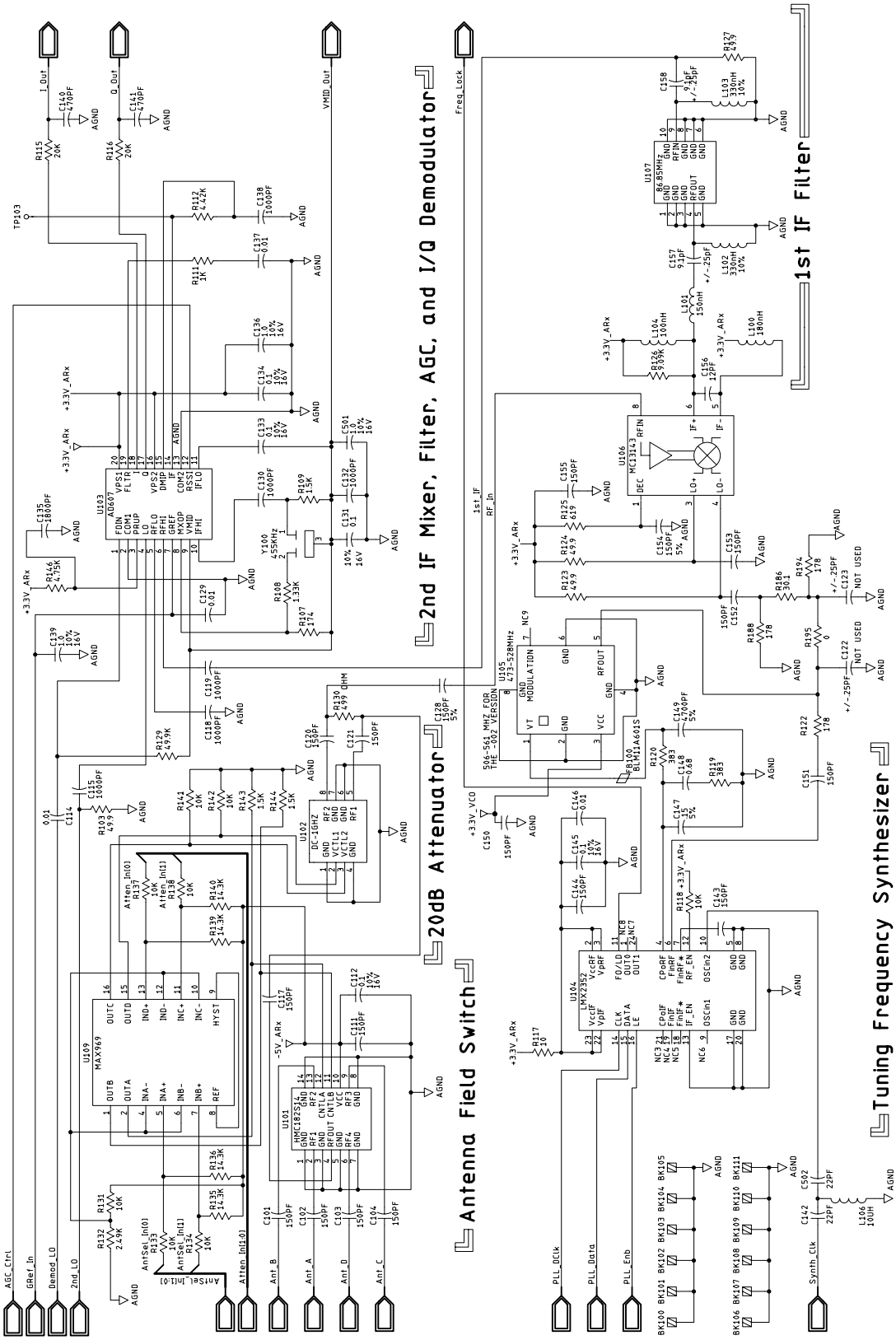
2nd IF Mixer, Filter, AGC, and I/Q Demodulator
1st IF Filter
20dB Attenuator
Antenna Field Switch
Tuning Frequency Synthesizer

Sheet 8

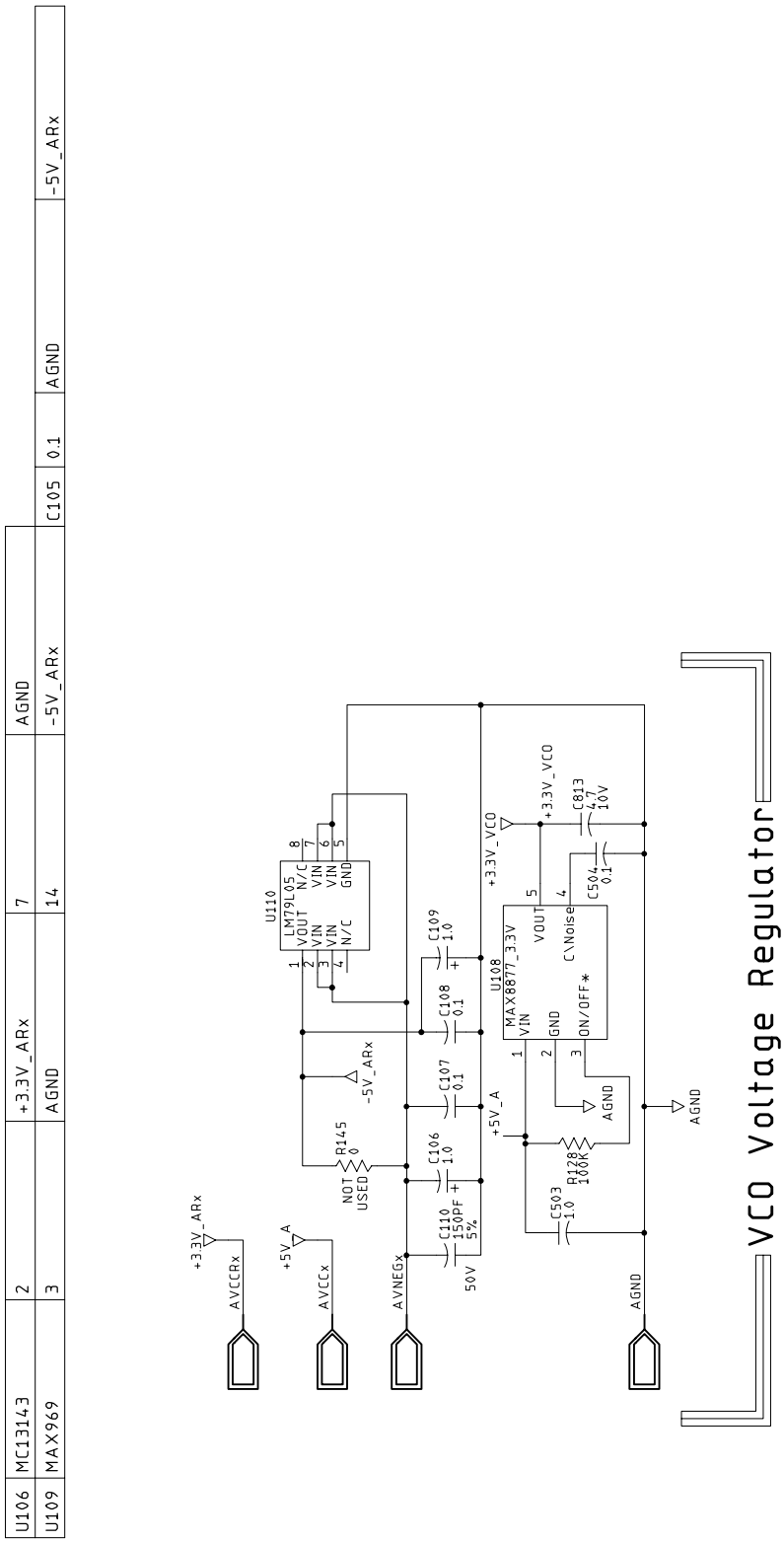
U106 MC13143 2 +3.3V_ARx 7 AGND
U109 MAX969 3 AGND 14 -5V_ARx C105 0.1 AGND -5V_ARx
VCO Voltage Regulator
+3.3V_ARx
AVCCRx
+5V_A
AVCCx
AVNEGx
NOT USED
R145 0
C110 150PF 5% 50V
C106 1.0
C107 0.1
C108 0.1
C109 1.0
U110 LM79L05
VOUT N/C VIN VIN VIN GND N/C
-5V_ARx
+5V_A
U108 MAX8877_3.3V
VIN GND ON/OFF* VOUT C\Noise
+3.3V_VCO
C503 1.0
R128 100K
C504 0.1
C813 4.7 10V
AGND

Sheet 9

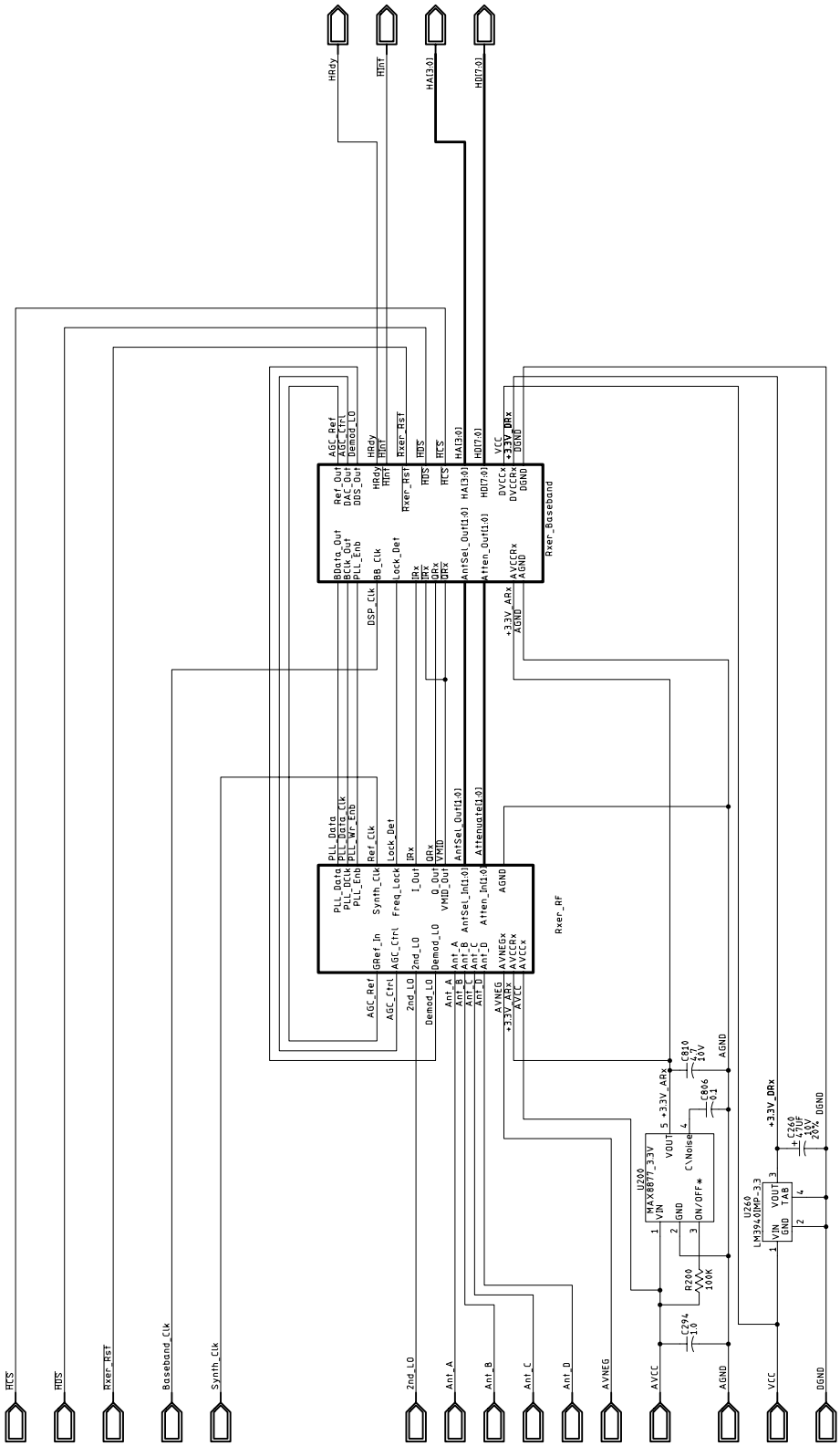
HRdy
HInt
HA[3:0]
HD[7:0]
HCS
HDS
Rxer_RST
Baseband_Clk
Synth_Clk
2nd_LO
Ant_A
Ant_B
Ant_C
Ant_D
AVNEG
AVCC
AGND
VCC
DGND
Rxer_Baseband
Rxer_RF
U200
MAX8877_33
U260
LM3940IMP-33
+3.3V_ARx
+3.3V_DRx

Sheet 10

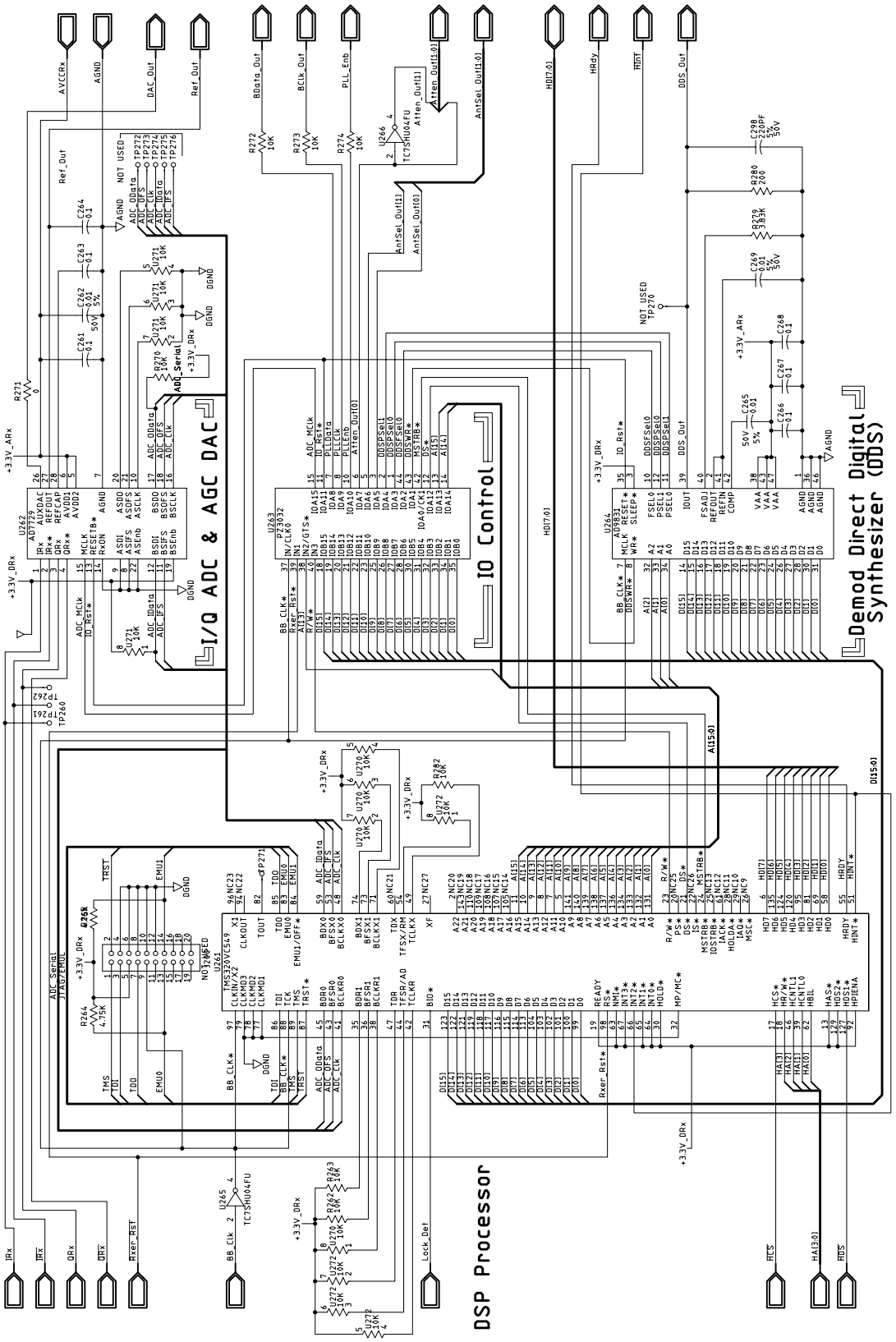
I/Q ADC & AGC DAC
IO Control
Demod Direct Digital Synthesizer (DDS)
DSP Processor

Sheet 11

Component		Power				Ground				Bypass Caps				No Connects
U261	TMS320VC549	4	33	56	75	1	3	14	15	C270	0.1	+3.3V_DRx	DGND	80
		112	130			34	37	40	50	C271	0.1	VCOREx	DGND	
					+3.3V_DRx	57	70	72	76	C272	0.1	+3.3V_DRx	DGND	
		12	16	52	68	90	93	106	111	C273	0.1	+3.3V_DRx	DGND	
		91	125	142	VCOREx	126	128	144	DGND	C274	0.1	+3.3V_DRx	DGND	
										C275	0.1	+3.3V_DRx	DGND	
										C276	0.1	VCOREx	DGND	
										C277	0.1	+3.3V_DRx	DGND	
U263	PZ3032	9			+3.3V_DRx	4			DGND	C278	0.1	+3.3V_DRx	DGND	
		17			+3.3V_DRx	16			DGND	C279	0.1	+3.3V_DRx	DGND	
		29			+3.3V_DRx	24			DGND	C280	0.1	+3.3V_DRx	DGND	
		41			+3.3V_DRx	36			DGND	C281	0.1	+3.3V_DRx	DGND	
U262	AD7729	24	25		+3.3V_DRx	23			DGND	C282	0.1	+3.3V_DRx	DGND	
U264	AD9831	4	5		+3.3V_DRx	6			DGND	C283	0.1	+3.3V_DRx	DGND	
		9				13				C284	0.1	+3.3V_DRx	DGND	
		25				29				C285	0.1	+3.3V_DRx	DGND	
U265	TC7SHU04FU	5			+3.3V_DRx	3			DGND	C286	0.1	+3.3V_DRx	DGND	1
U266	TC7SHU04FU	5			+3.3V_DRx	3			DGND	C287	0.1	+3.3V_DRx	DGND	1

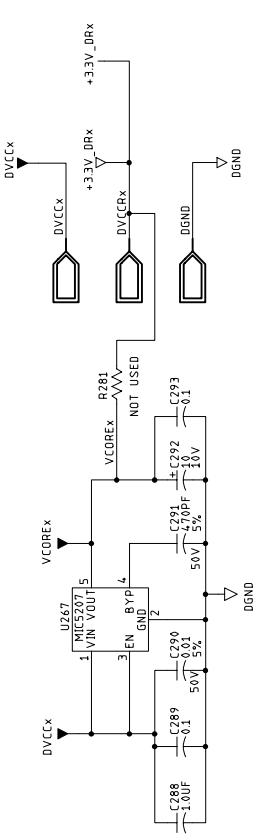

Sheet 12

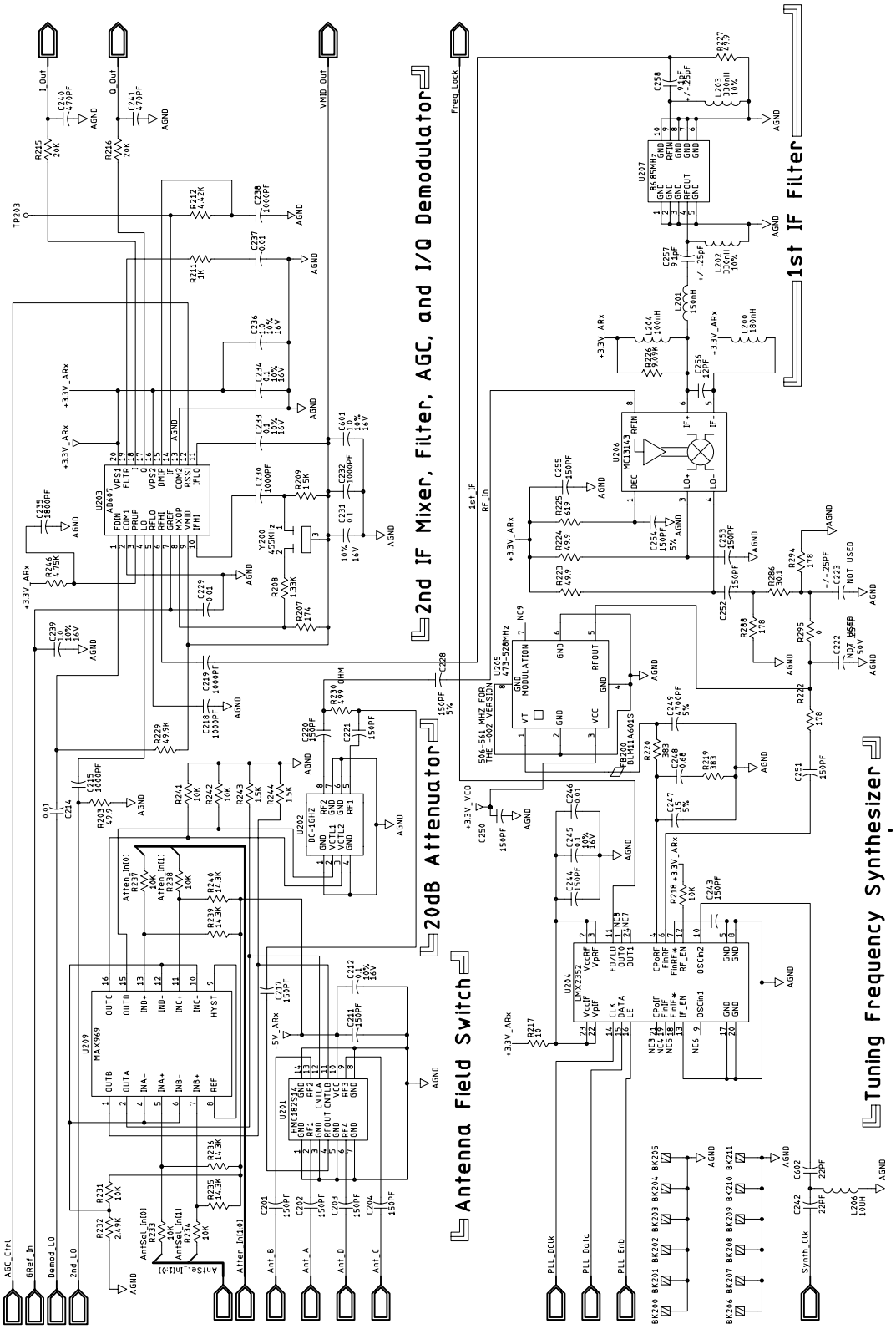
2nd IF Mixer, Filter, AGC, and I/Q Demodulator
1st IF Filter
20dB Attenuator
Antenna Field Switch
Tuning Frequency Synthesizer

Sheet 13

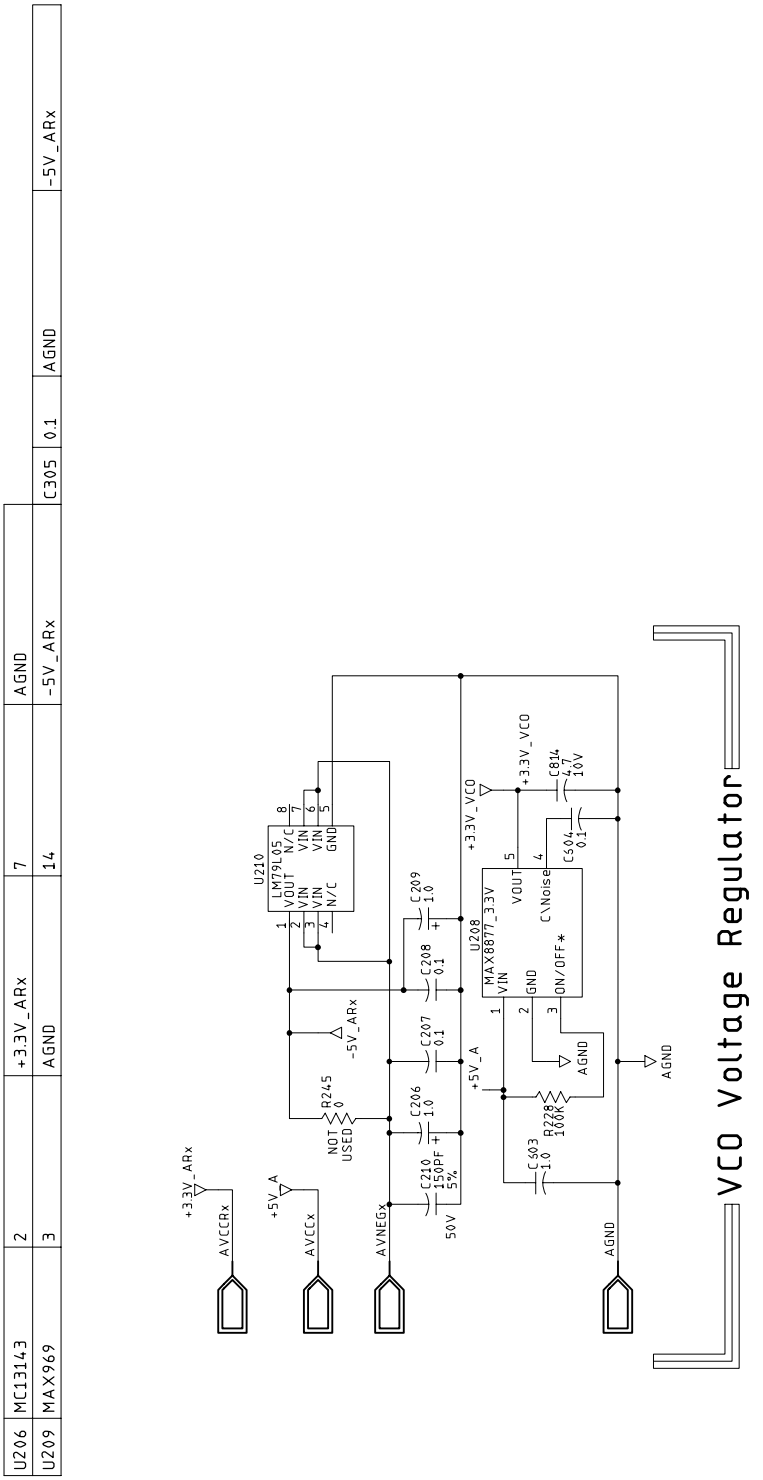
VCO Voltage Regulator
+3.3V_ARx
AVCCRx
+5V_A
AVCCx
AVNEGx
-5V_ARx
NOT USED
R245 0
C206 1.0
C207 0.1
C208 0.1
C209 1.0
C210 150PF 5%
50V
U210 LM79L05 VOUT VIN VIN N/C N/C VIN VIN GND
U208 MAX8877_3.3V VIN GND ON/OFF* VOUT C\Noise
+3.3V_VCO
C814 4.7 10V
C604 0.1
C603 1.0
R228 100K
AGND
U206 MC13143 2 +3.3V_ARx 7 AGND C305 0.1 AGND -5V_ARx
U209 MAX969 3 AGND 14 -5V_ARx -5V_ARx

Sheet 14

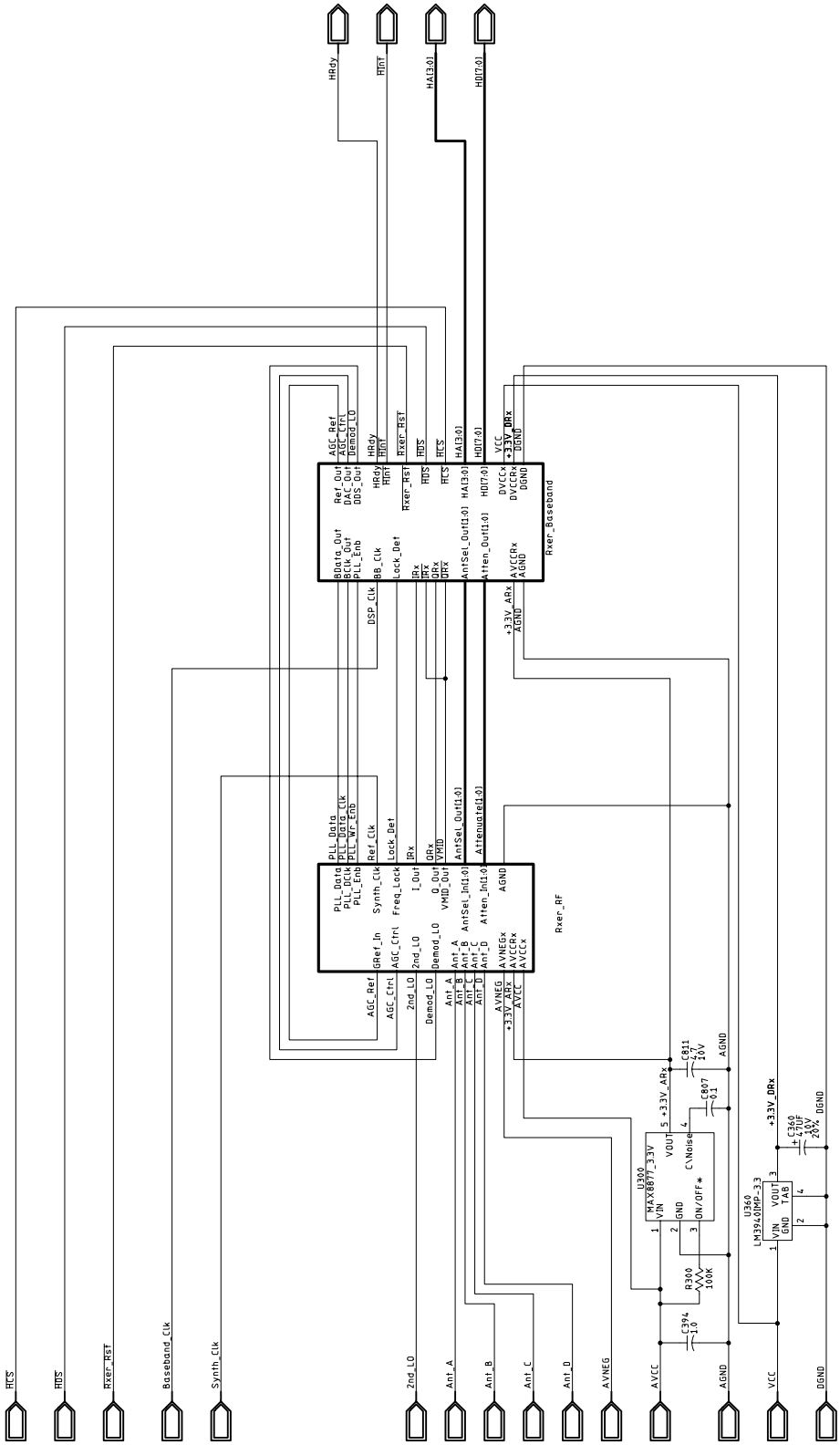
HRdy
HINT
HA[3:0]
HD[7:0]
Rxer_Baseband
Rxer_RF
U300
MAX8877_33V
U360
LM3940IMP-33
+3.3V_DRx
+3.3V_ARx
AVCC
AGND
VCC
DGND
2nd_LO
Ant_A
Ant_B
Ant_C
Ant_D
AVNEG
HCS
HDS
Rxer_RST
Baseband_Clk
Synth_Clk

Sheet 15

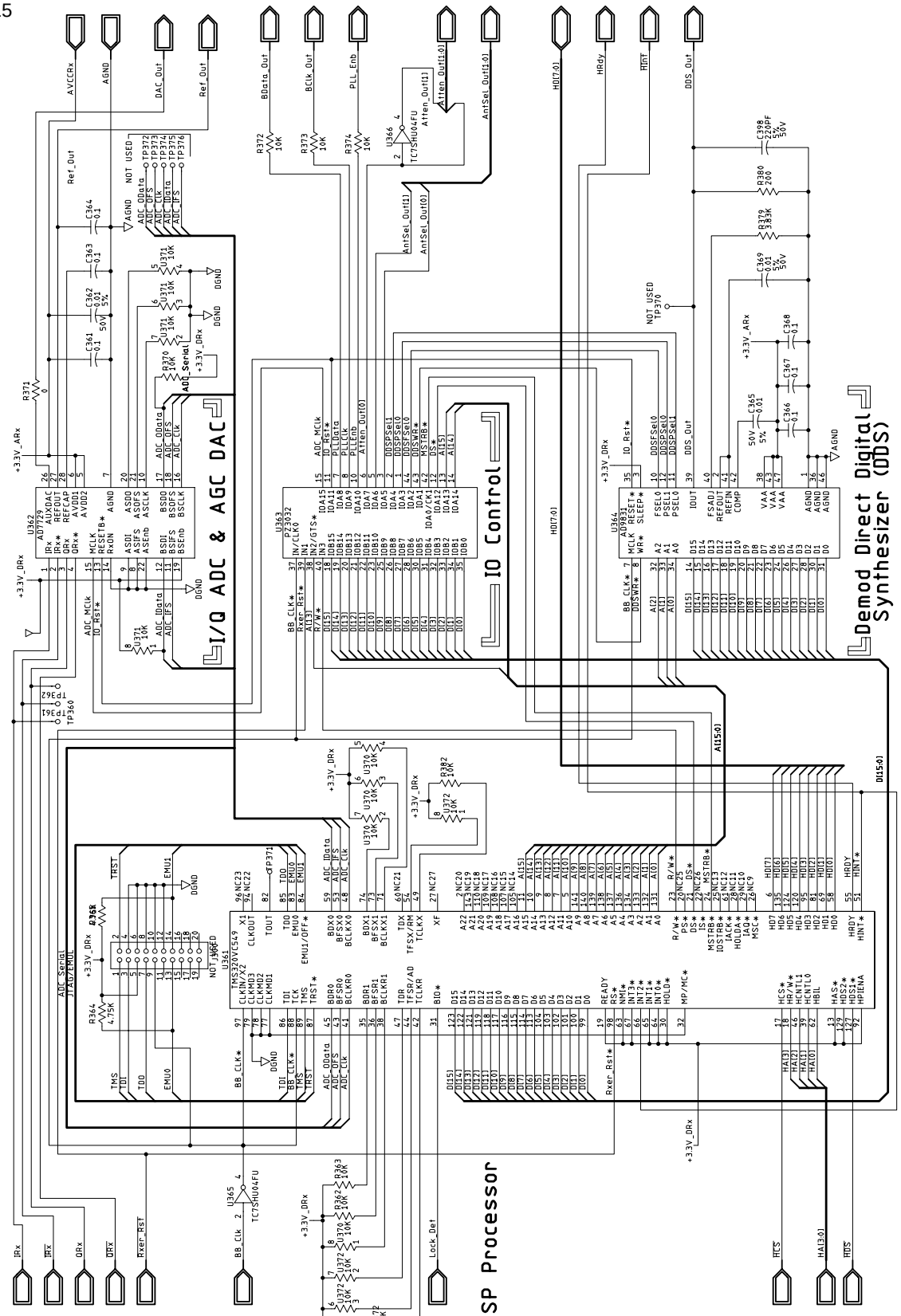
I/Q ADC & AGC DAC
IO Control
Demod Direct Digital Synthesizer (DDS)
DSP Processor

Sheet 16

Component		Power					Ground					Bypass Caps				No Connects
U261	TMS320VC549	4	33	56	75	+3.3V_DRx	1	3	14	15		C270	0.1	+3.3V_DRx	DGND	80
		112	130				34	37	40	50		C271	0.1	VCOREx	DGND	
							57	70	72	76		C272	0.1	+3.3V_DRx	DGND	
		12	16	52	68		90	93	106	111		C273	0.1	+3.3V_DRx	DGND	
		91	125	142		VCOREx	126	128	144		DGND	C274	0.1	+3.3V_DRx	DGND	
												C275	0.1	+3.3V_DRx	DGND	
												C276	0.1	VCOREx	DGND	
												C277	0.1	+3.3V_DRx	DGND	
U263	PZ3032	9				+3.3V_DRx	4				DGND	C278	0.1	+3.3V_DRx	DGND	
		17				+3.3V_DRx	16				DGND	C279	0.1	+3.3V_DRx	DGND	
		29				+3.3V_DRx	24				DGND	C280	0.1	+3.3V_DRx	DGND	
		41				+3.3V_DRx	36				DGND	C281	0.1	+3.3V_DRx	DGND	
U262	AD7729	24	25			+3.3V_DRx	23				DGND	C282	0.1	+3.3V_DRx	DGND	
U264	AD9831	4	5			+3.3V_DRx	6				DGND	C283	0.1	+3.3V_DRx	DGND	
		9					13					C284	0.1	+3.3V_DRx	DGND	
		25					29					C285	0.1	+3.3V_DRx	DGND	
U265	TC7SHU04FU	5				+3.3V_DRx	3				DGND	C286	0.1	+3.3V_DRx	DGND	1
U266	TC7SHU04FU	5				+3.3V_DRx	3				DGND	C287	0.1	+3.3V_DRx	DGND	1

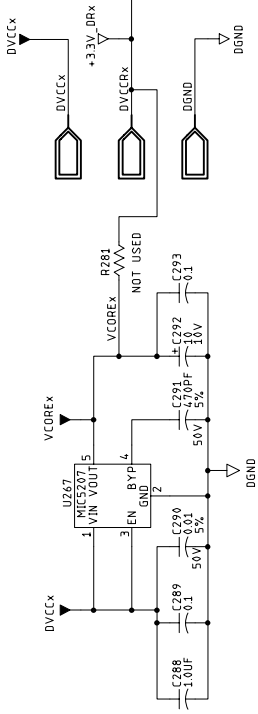

Sheet 17

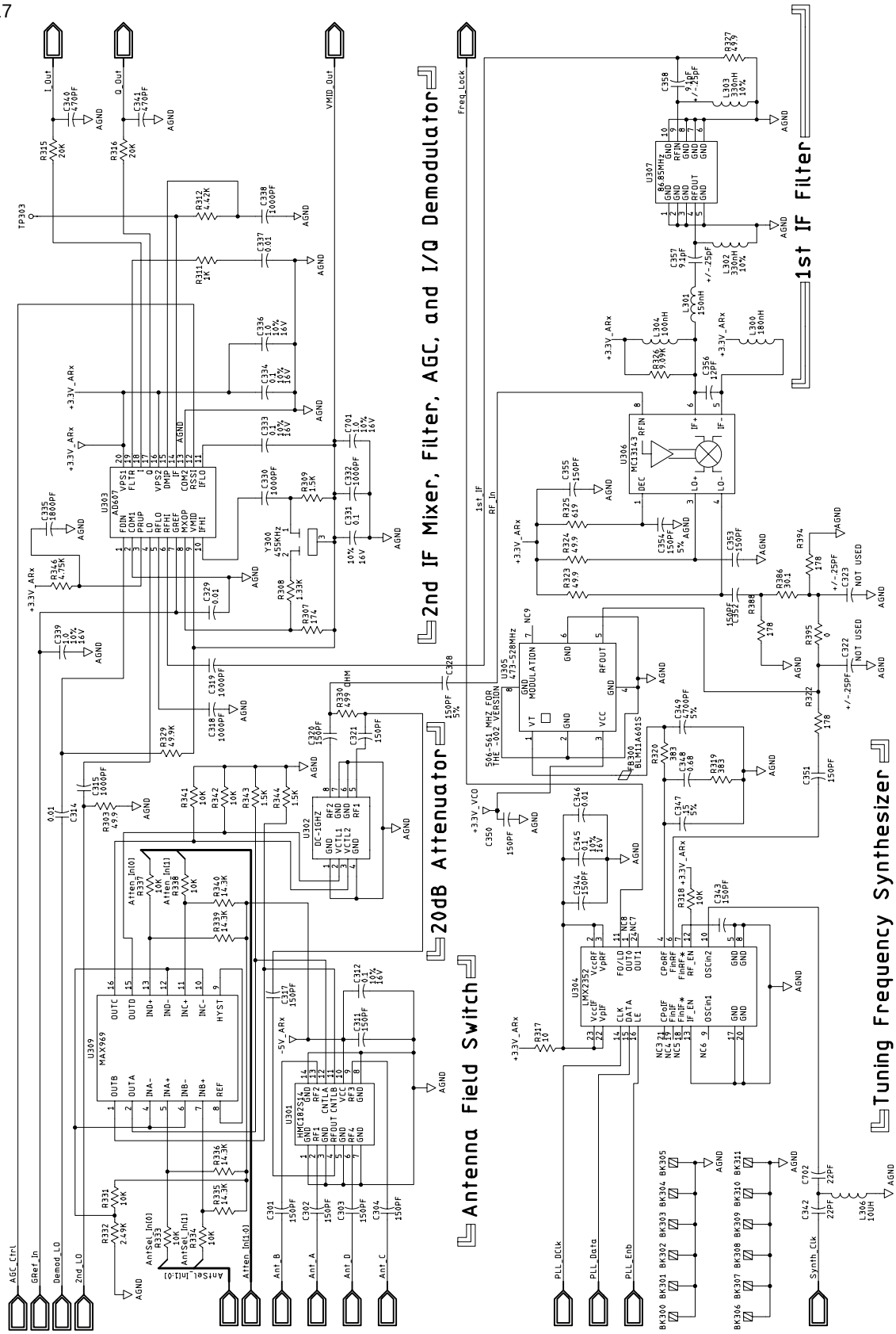
Antenna Field Switch
20dB Attenuator
2nd IF Mixer, Filter, AGC, and I/Q Demodulator
1st IF Filter
Tuning Frequency Synthesizer
AGC_Ctrl
GRef_In
Demod_LO
2nd_LO
I_Out
Q_Out
VMID_Out
Freq_Lock
1st_IF
RF_In
Ant_A
Ant_B
Ant_C
Ant_D
Atten_In(0)
Atten_In(1)
AntSel_In(1:0)
PLL_DClk
PLL_Data
PLL_Enb
Synth_Clk
U309 MAX969
U302 DC-1GHZ
U301 HMC182S14
U303 AD607
U304 LMX2352
U305 473-528MHz
U306 MC1314
U307 86.85MHz
506-561 MHZ FOR THE -002 VERSION

Sheet 18

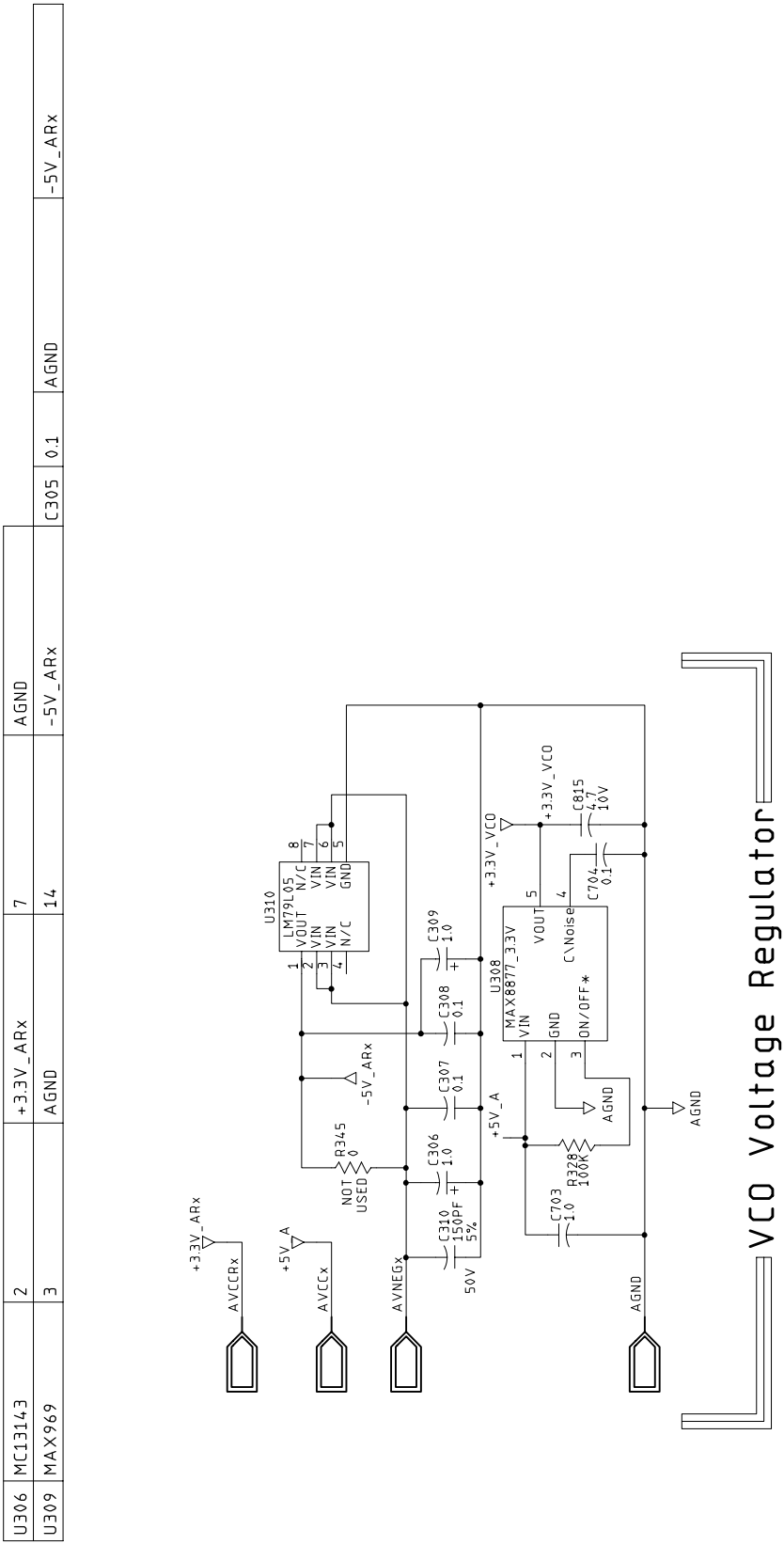
U306 MC13143 2 +3.3V_ARx 7 AGND
U309 MAX969 3 AGND 14 -5V_ARx
C305 0.1 AGND -5V_ARx
VCO Voltage Regulator
+3.3V_ARx
AVCCRx
+5V_A
AVCCx
AVNEGx
NOT USED
R345 0
C310 150PF 5%
50V
C306 1.0
C307 0.1
C308 0.1
C309 1.0
U310 LM79L05
N/C VOUT VIN VIN VIN N/C GND
-5V_ARx
+5V_A
U308 MAX8877_3.3V
VIN GND ON/OFF* VOUT C\Noise
+3.3V_VCO
C703 1.0
R328 100K
C704 0.1
C815 4.7 10V
AGND

Sheet 19

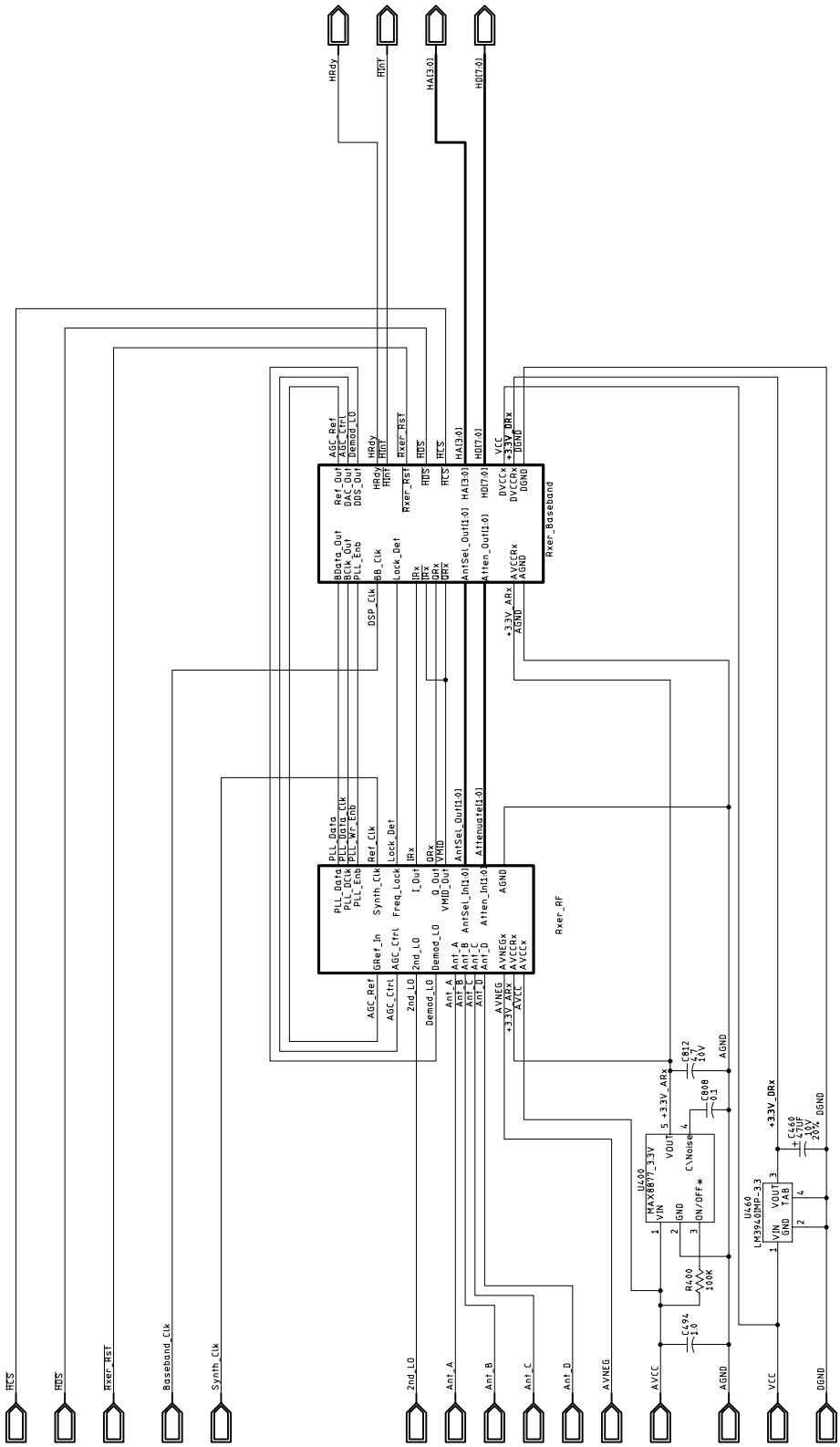
HRdy
HInt
HA[3:0]
HD[7:0]
Rxer_Baseband
Rxer_RF
U400
MAX8877_3.3V
U460
LM3940IMP-3.3
HCS
HDS
Rxer_Rst
Baseband_Clk
Synth_Clk
2nd_LO
Ant_A
Ant_B
Ant_C
Ant_D
AVNEG
AVCC
AGND
VCC
DGND

Sheet 20

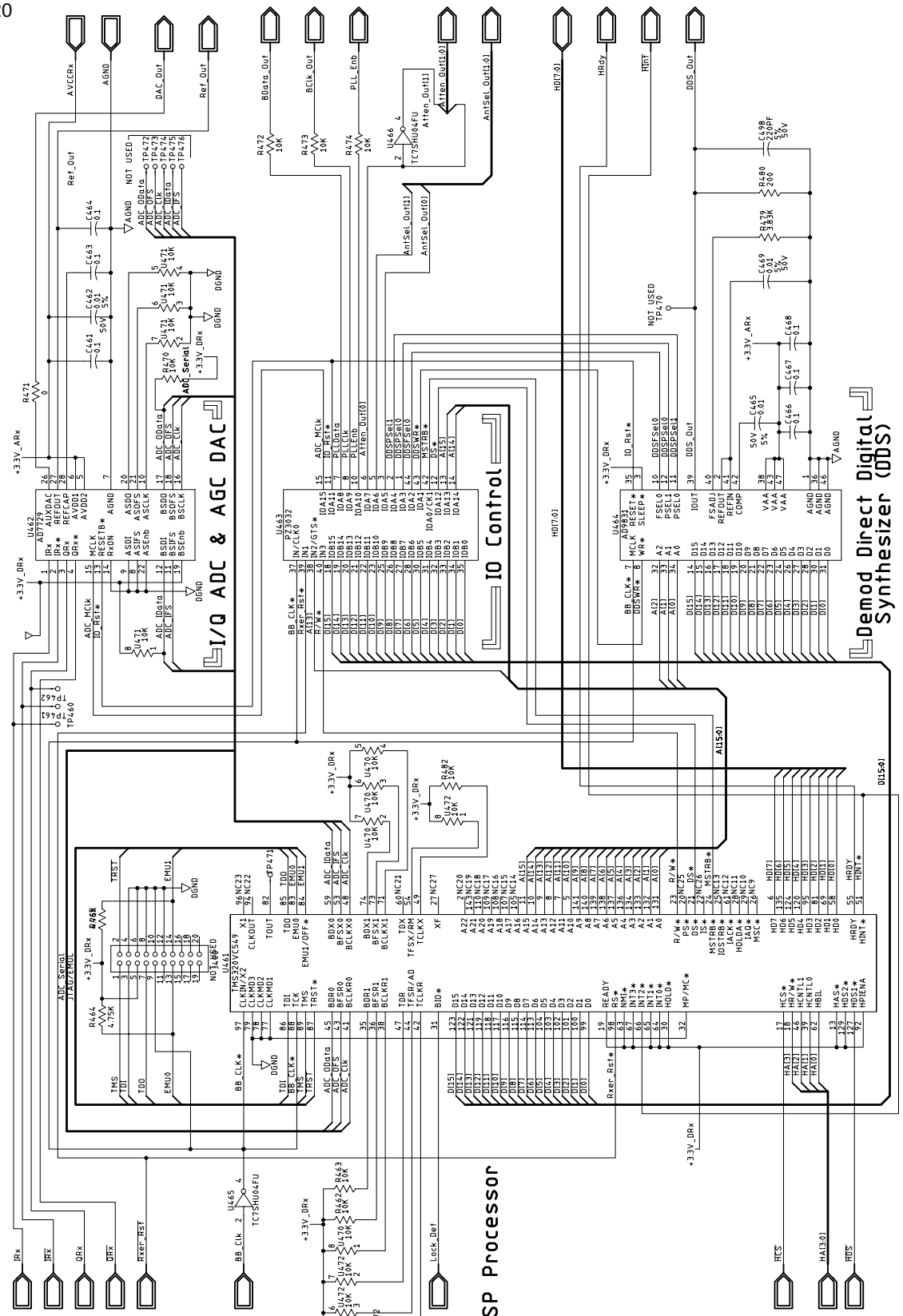
I/Q ADC & AGC DAC
IO Control
Demod Direct Digital Synthesizer (DDS)
DSP Processor

Sheet 21

Component		Power			Ground			Bypass Caps			No Connects
U461	TMS320VC549	4 33 56 75			1 3 14 15			C470 0.1	+3.3V_DRx	DGND	80
		112 130		+3.3V_DRx	34 37 40 50			C471 0.1	VCOREx	DGND	
		12 16 52 68			57 70 72 76			C472 0.1	+3.3V_DRx	DGND	
		91 125 142		VCOREx	90 93 106 111			C473 0.1	+3.3V_DRx	DGND	
					126 128 144		DGND	C474 0.1	+3.3V_DRx	DGND	
								C475 0.1	+3.3V_DRx	DGND	
								C476 0.1	VCOREx	DGND	
								C477 0.1	+3.3V_DRx	DGND	
U463	PZ3032	9	+3.3V_DRx		4	DGND		C478 0.1	+3.3V_DRx	DGND	
		17	+3.3V_DRx		16	DGND		C479 0.1	+3.3V_DRx	DGND	
		29	+3.3V_DRx		24	DGND		C480 0.1	+3.3V_DRx	DGND	
		41	+3.3V_DRx		36	DGND		C481 0.1	+3.3V_DRx	DGND	
U462	AD7729	24 25	+3.3V_DRx		23	DGND		C482 0.1	+3.3V_DRx	DGND	
U464	AD9831	4 5	+3.3V_DRx		6	DGND		C483 0.1	+3.3V_DRx	DGND	
		9			13			C484 0.1	+3.3V_DRx	DGND	
		25			29			C485 0.1	+3.3V_DRx	DGND	
U465	TC7SHU04FU	5	+3.3V_DRx		3	DGND		C486 0.1	+3.3V_DRx	DGND	1
U466	TC7SHU04FU	5	+3.3V_DRx		3	DGND		C487 0.1	+3.3V_DRx	DGND	1

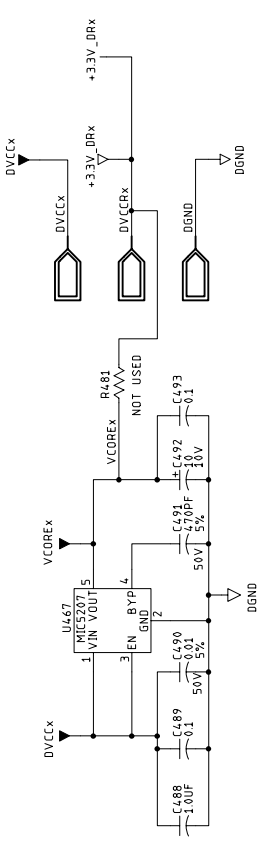

Sheet 22

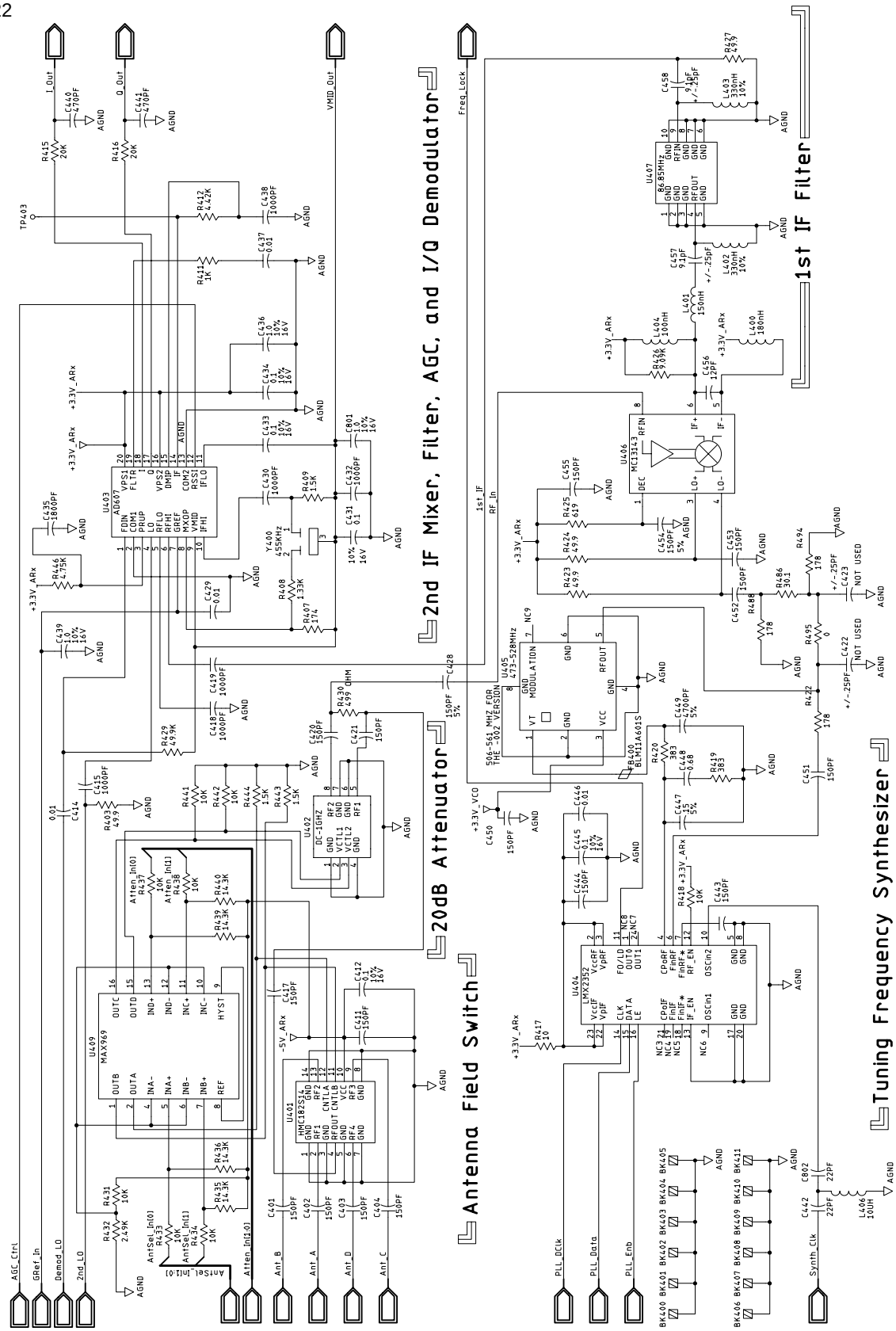
Antenna Field Switch
20dB Attenuator
2nd IF Mixer, Filter, AGC, and I/Q Demodulator
1st IF Filter
Tuning Frequency Synthesizer
AGC_Ctrl
GRef_In
Demod_LO
2nd_LO
I_Out
Q_Out
VMID_Out
Freq_Lock
1st_IF
RF_In
PLL_DClk
PLL_Data
PLL_Enb
Synth_Clk
Ant_A
Ant_B
Ant_C
Ant_D
AntSel_In[1:0]
Atten_In[1:0]
+3.3V_ARx
+5V_ARx
+3.3V_VCO
AGND

Sheet 23

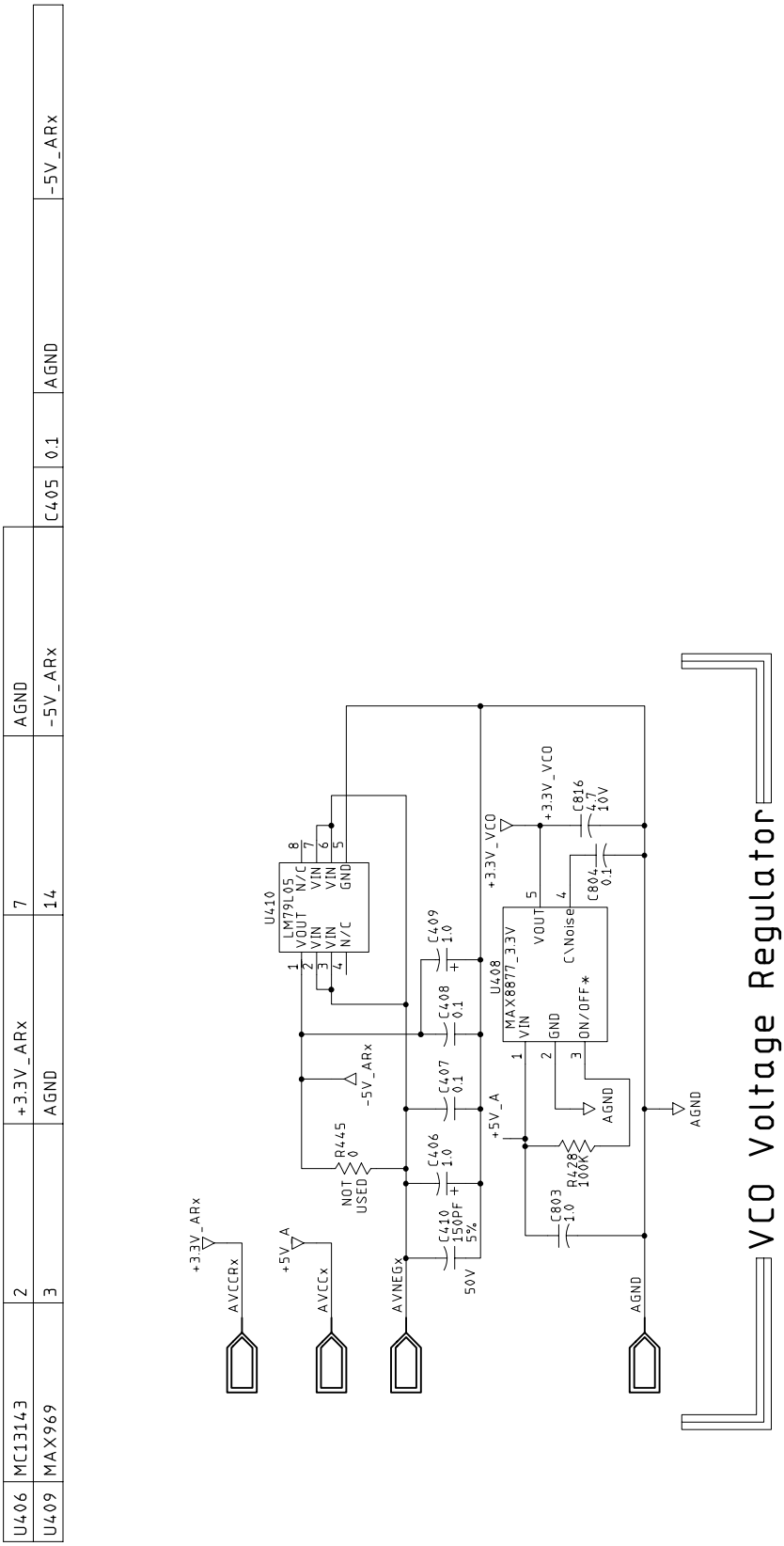
VCO Voltage Regulator
U406 MC13143 2 +3.3V_ARx 7 AGND
U409 MAX969 3 AGND 14 -5V_ARx
C405 0.1 AGND -5V_ARx
+3.3V_ARx
AVCCRx
+5V_A
AVCCx
AVNEGx
NOT USED
R445 0
-5V_ARx
C410 150PF 5% 50V
C406 1.0
C407 0.1
C408 0.1
C409 1.0
U410 LM79L05
N/C VOUT VIN VIN VIN N/C GND
+5V_A
U408 MAX8877_3.3V
VIN GND ON/OFF* VOUT C\Noise
+3.3V_VCO
C803 1.0
R428 100K
C804 0.1
C816 4.7 10V
AGND

GE Medical Systems
Information Technologies

gemedical.com